System on Chip

A processor based System-on-Chip will typically include:

- Hardware
  - A processor core (e.g. ARM M0 DesignStart, RISC-V PicoRV32)
  - Interconnect (e.g. AHB-Lite bus)
  - Fixed program memory (ROM)
  - Data memory (RAM)
  - Application specific interfaces (for input and ouput)
- Software
  - Application specific software (typically written in C)

Hardware

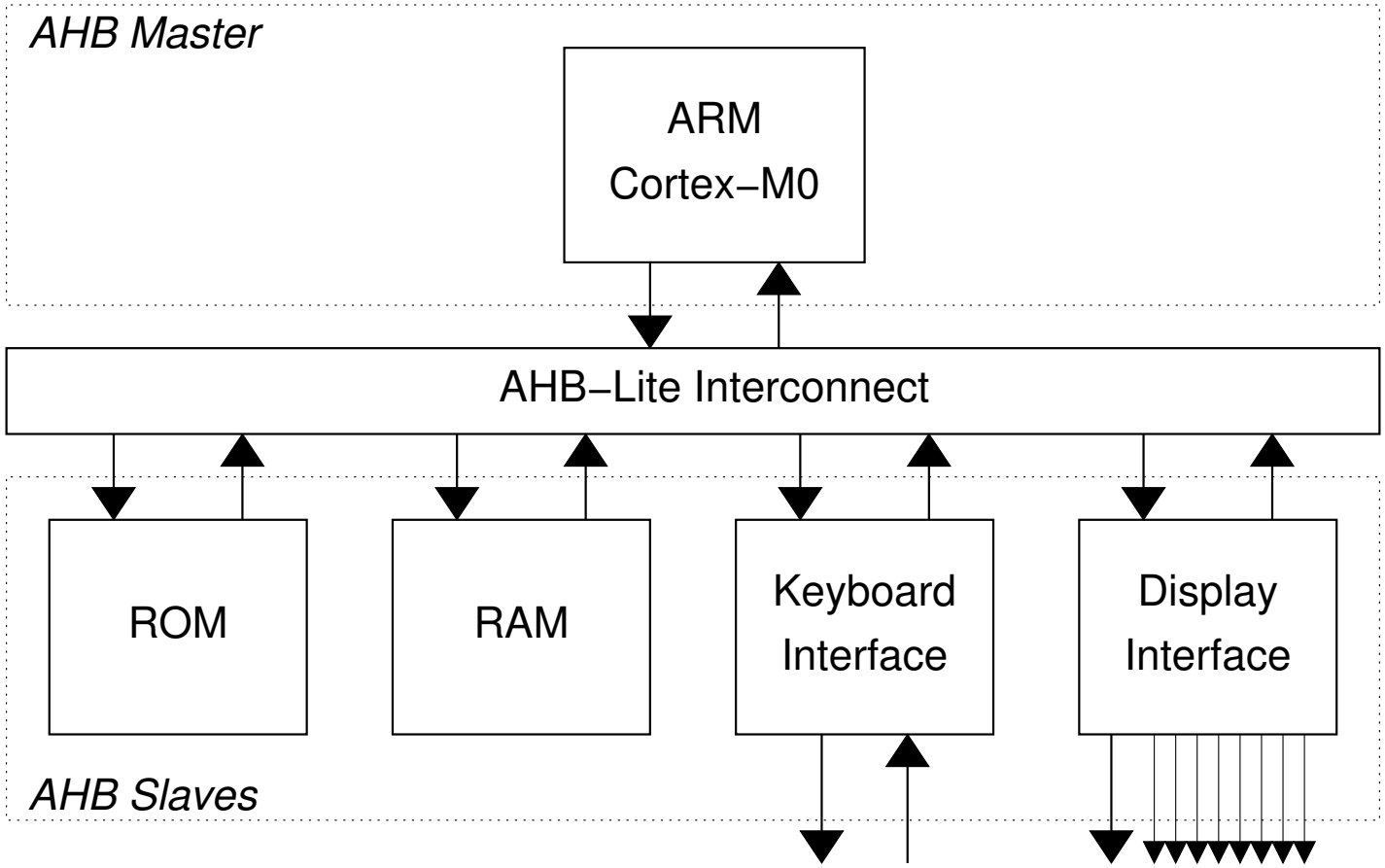
AHB Master
ARM
Cortex–M0
AHB–Lite Interconnect
ROM
RAM
Keyboard
Interface
Display
Interface
AHB Slaves

Hardware

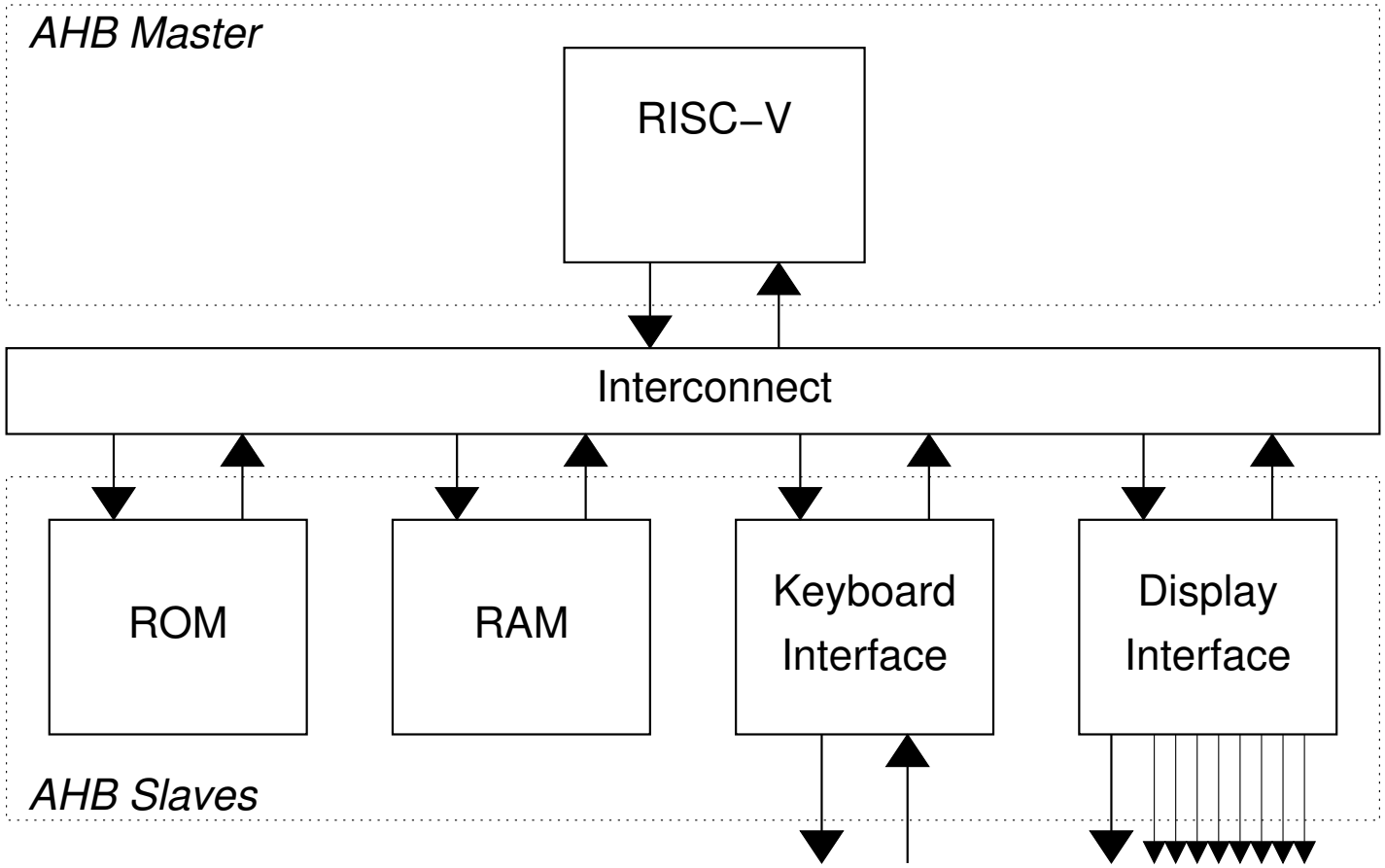
AHB Master
RISC–V
Interconnect
ROM
RAM
Keyboard Interface
Display Interface
AHB Slaves

Hardware

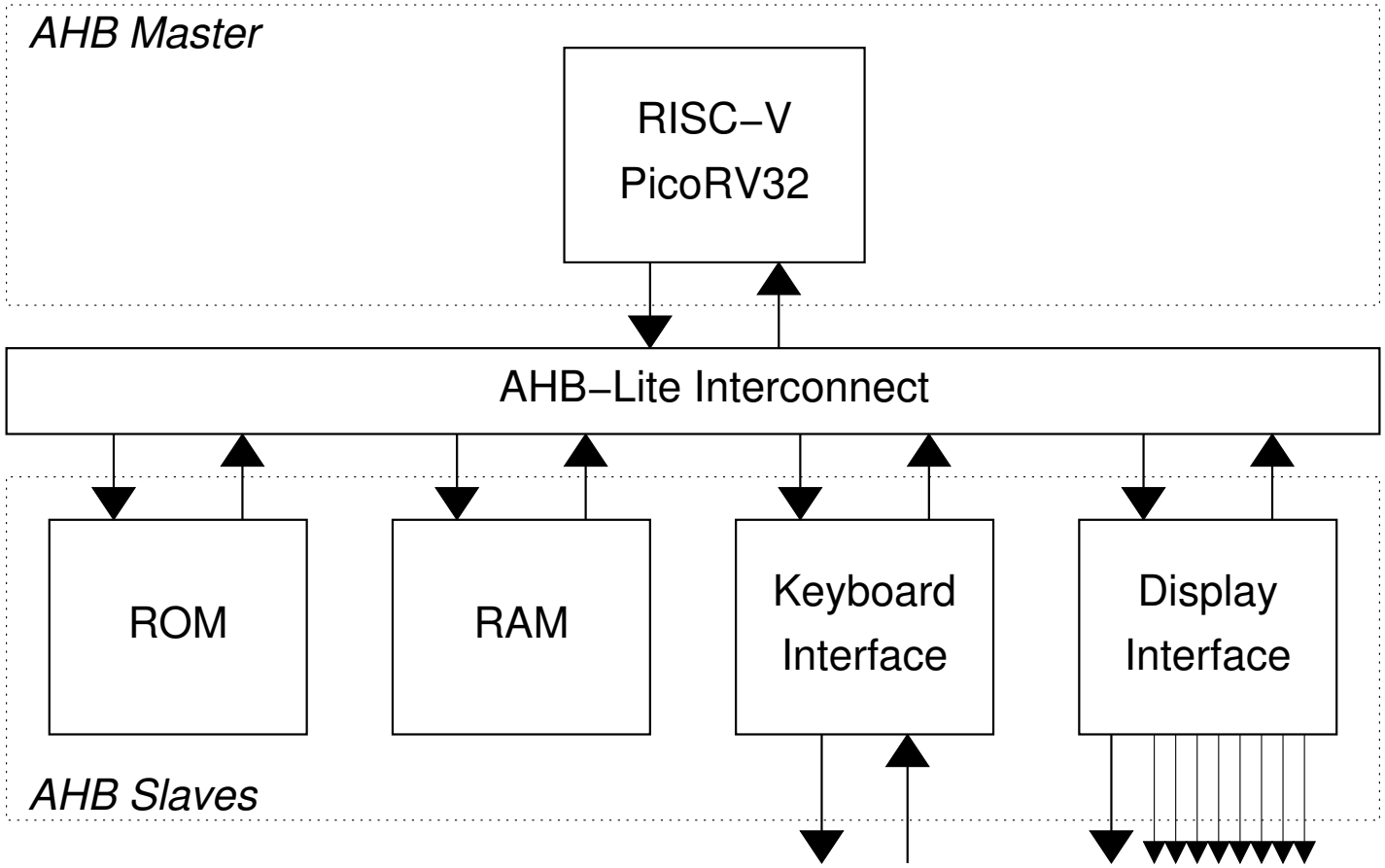
AHB Master
RISC–V
PicoRV32
AHB–Lite Interconnect
ROM
RAM
Keyboard
Interface
Display
Interface
AHB Slaves

Use of Third-Party Intellectual Property

The use of hardware and software modules created by others allows designers to build larger and more complex systems.

You may make use of third-party intellectual property in your design provided that:

1. You have the permission of the designer
2. You acknowledge its use in your report
3. You do not remove copyright/licensing notices

In a simple design you might expect to use a third-party processor core together with customised versions of third-party interconnect, ROM and RAM modules

Use of Third-Party Intellectual Property

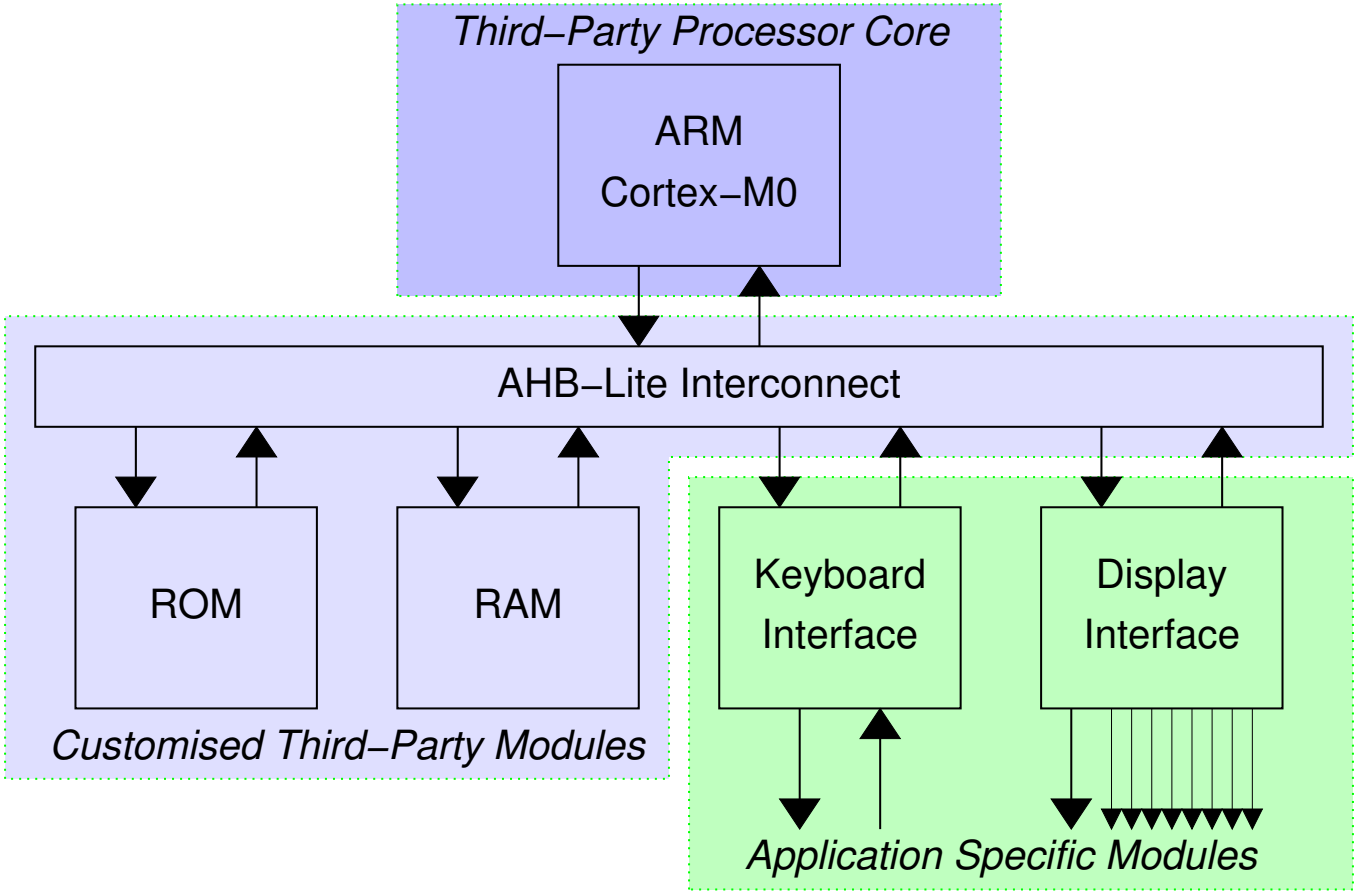

ARM Cortex-M0 DesignStart

- Simple 32-bit ARM processor core

  Designed for embedded applications.

- Executes 16-bit instructions from the ARM Thumb2 instruction set

  Supported by standard GNU compilers.

- Obfuscated Verilog Source Code

  Designed to be usable but not to be reverse engineered or customised.

- Available free for academic and other non-commercial use

  You may use the provided core for this project. If you wish the Cortex-M0 DesignStart for another purpose, you should apply to ARM for permission.

Programmers View - Memory Mapped I/O

The programmer sees each input/output device as occupying one or more memory locations.

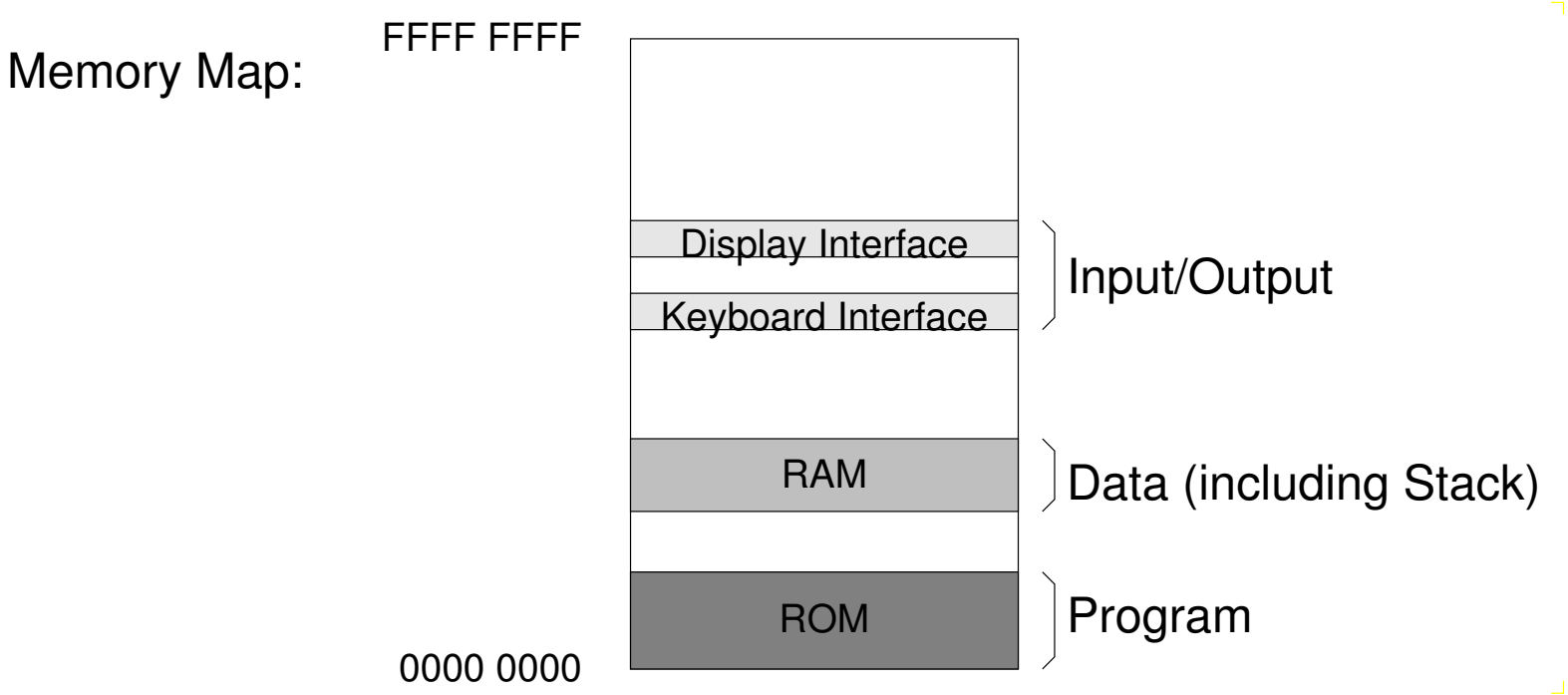

AHB-Lite Bus

Each memory access takes two or more clock cycles

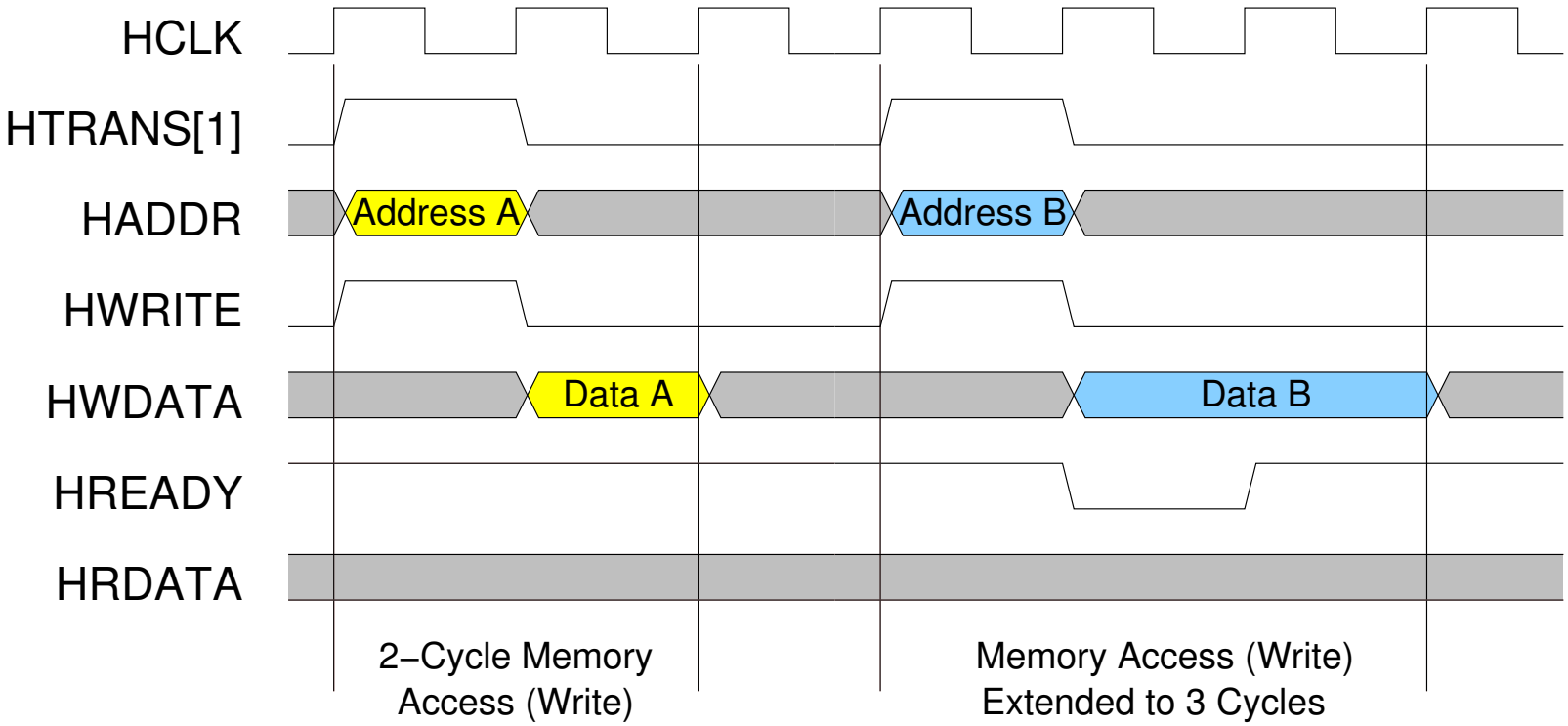

AHB-Lite Bus

Each memory access takes two or more clock cycles

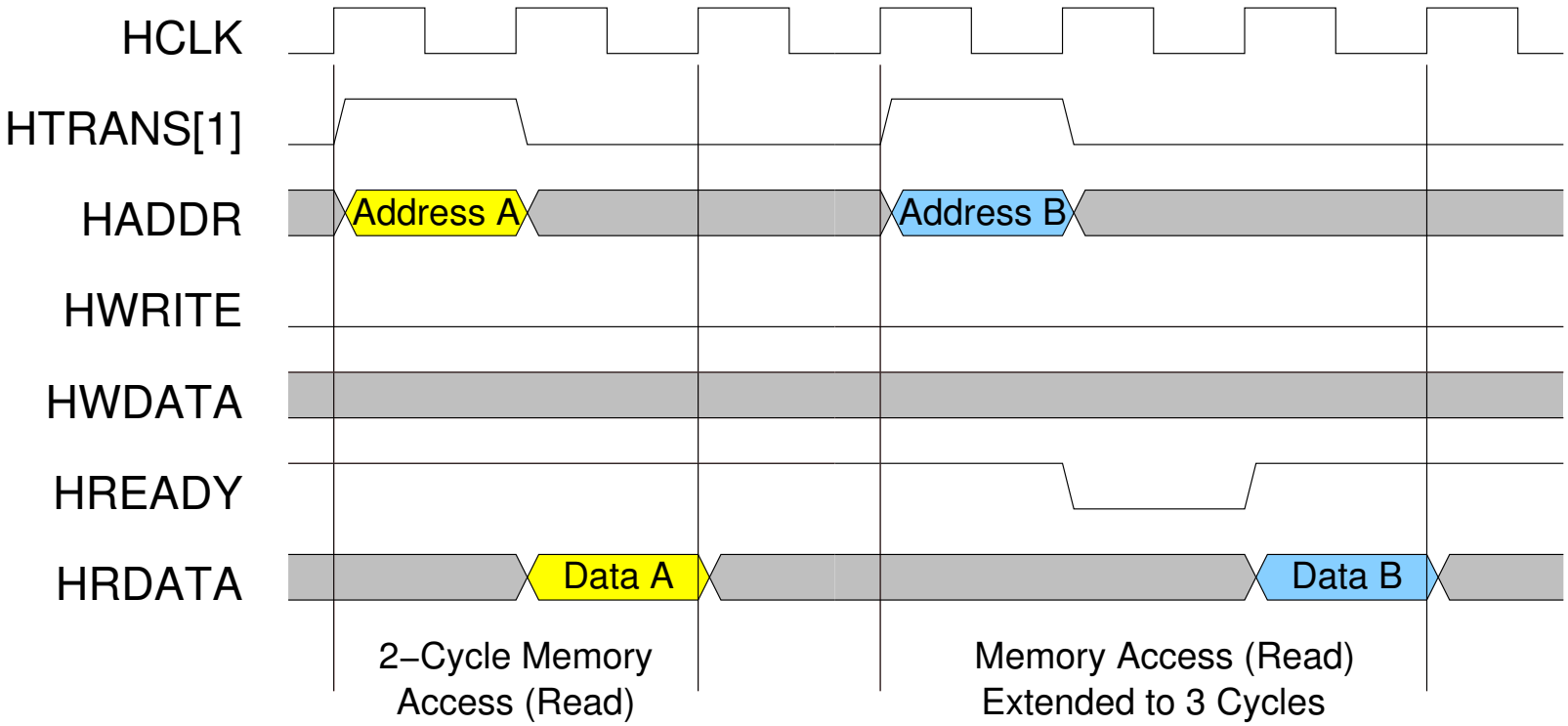

AHB-Lite Bus

Each memory access takes two or more clock cycles

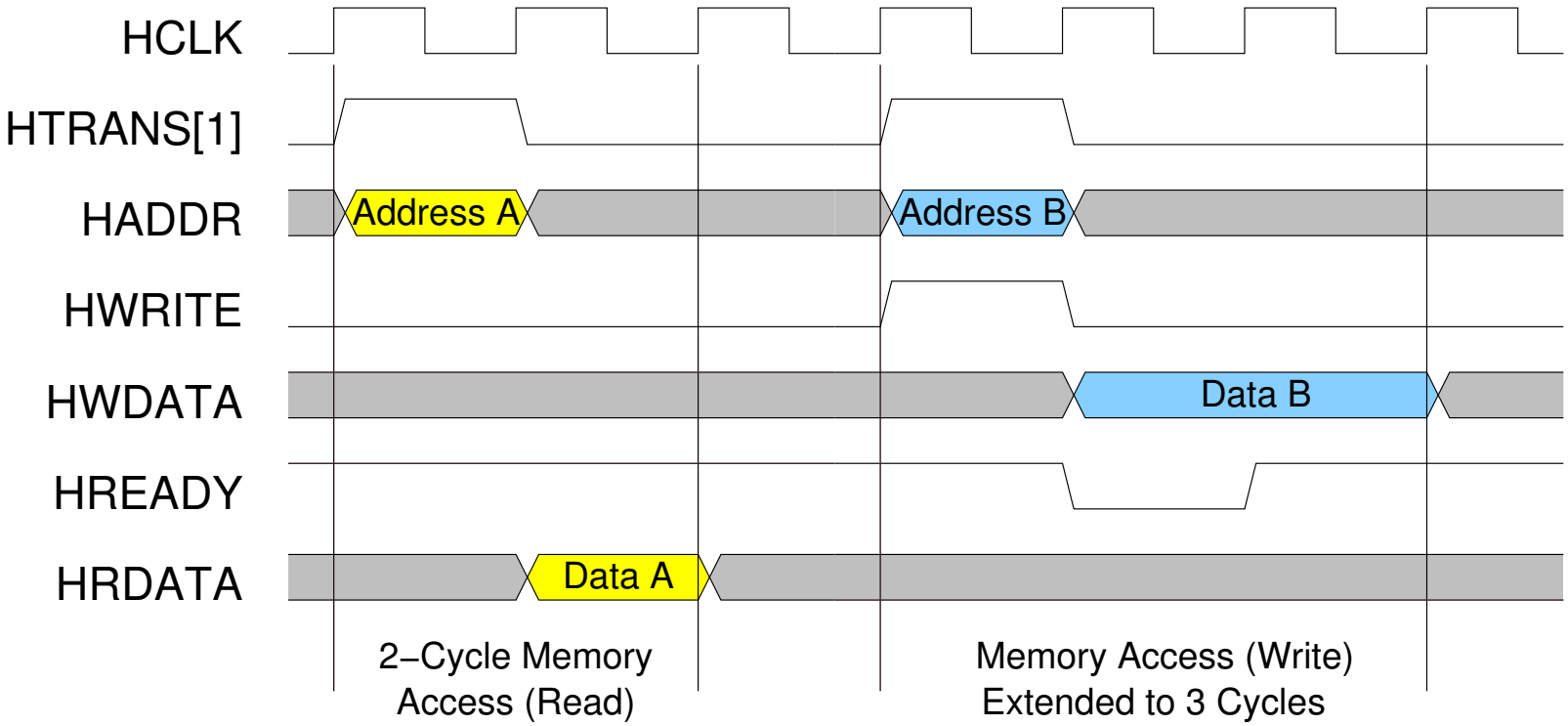

AHB-Lite Bus

Memory accesses can be pipelined[1]

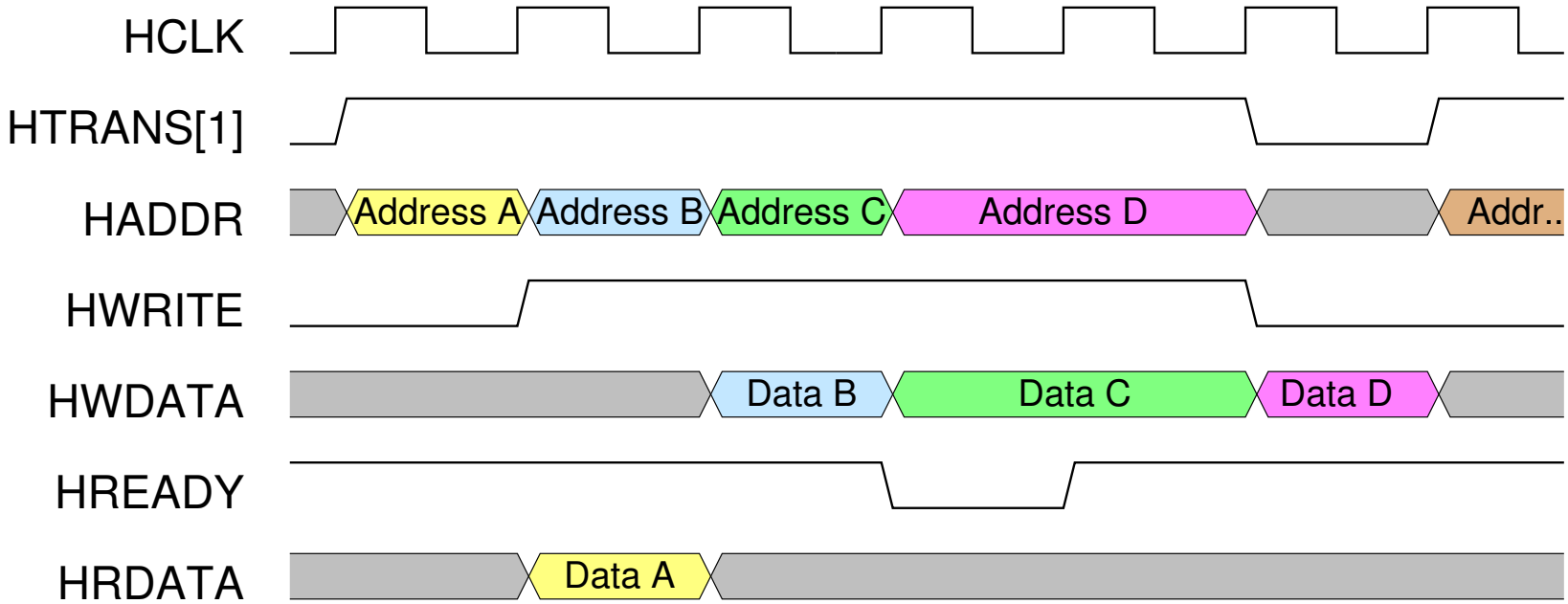

[1]the address phase of one memory access may start before the data phase of the previous access is complete

AHB-Lite Bus

Memory accesses can be pipelined[1]

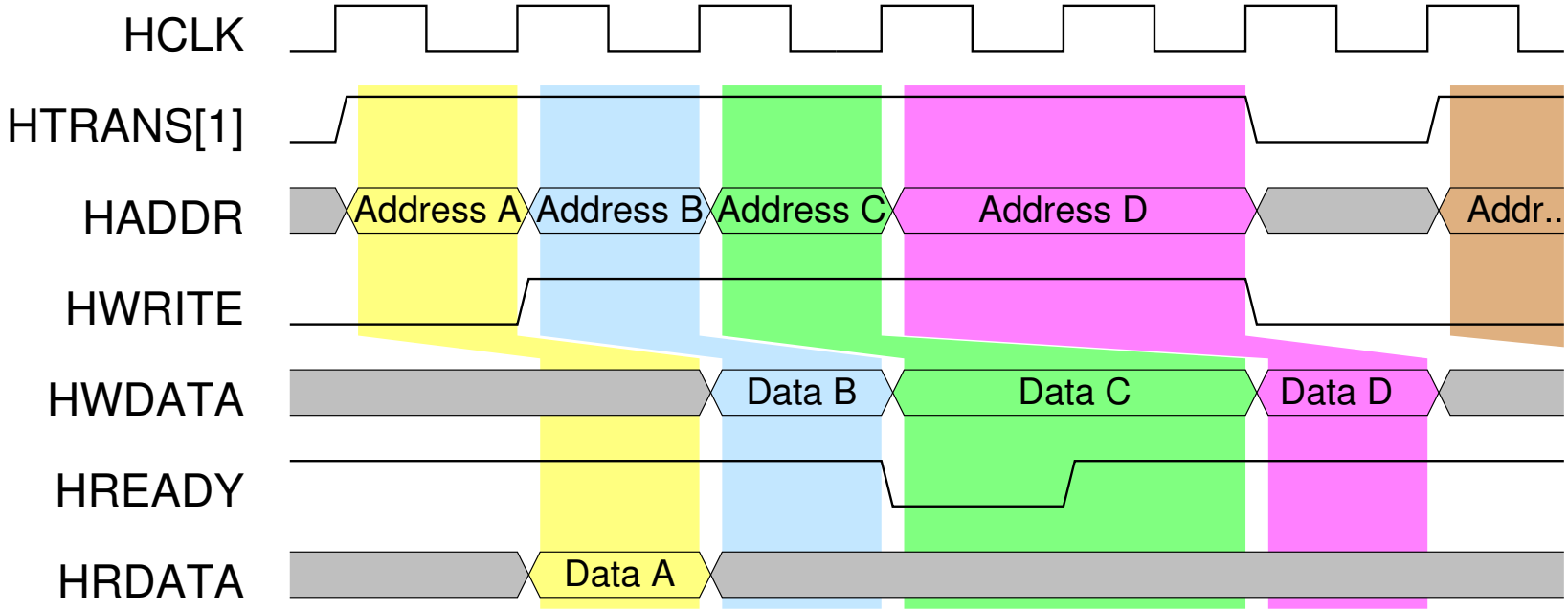

[1]the address phase of one memory access may start before the data phase of the previous access is complete

AHB-Lite Bus

Memory accesses can be pipelined[1]

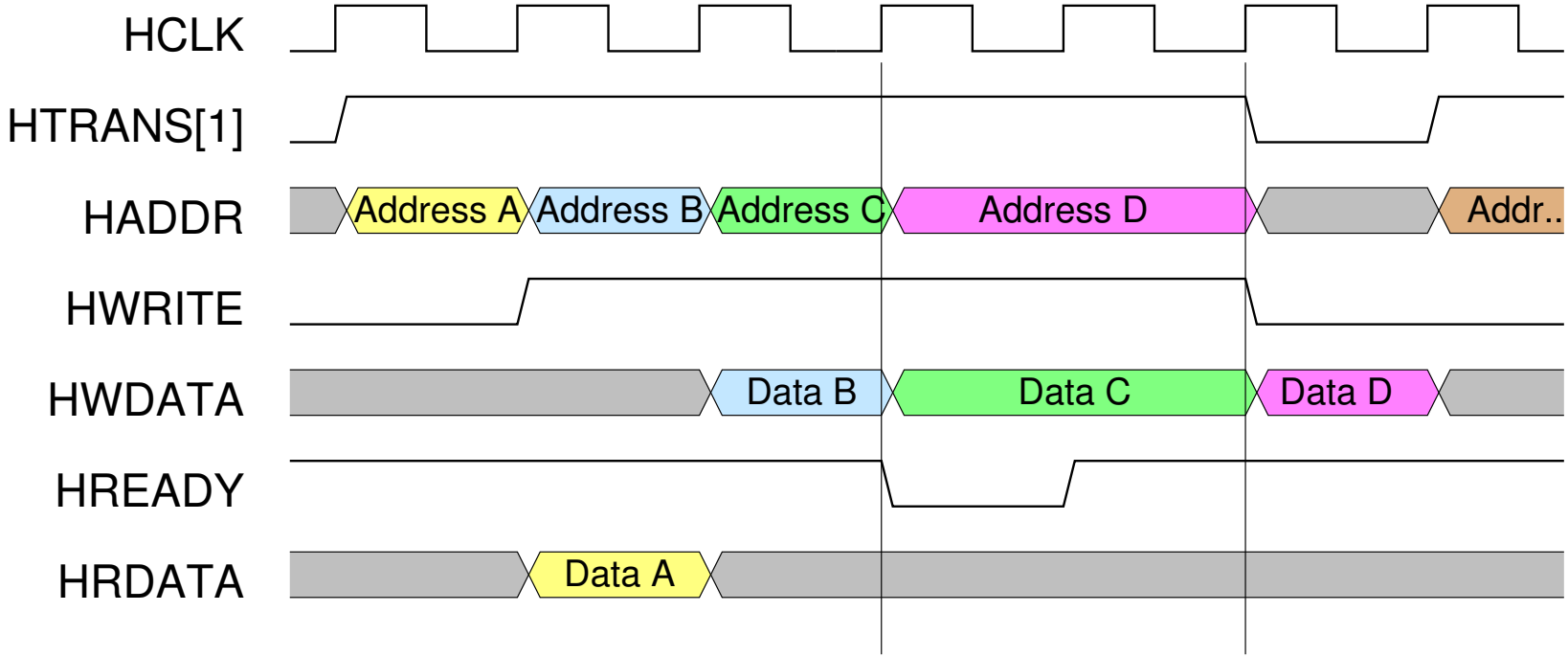

* The wait state for transaction C also extends the address phase of transaction D

[1]the address phase of one memory access may start before the data phase of the previous access is complete

System on Chip

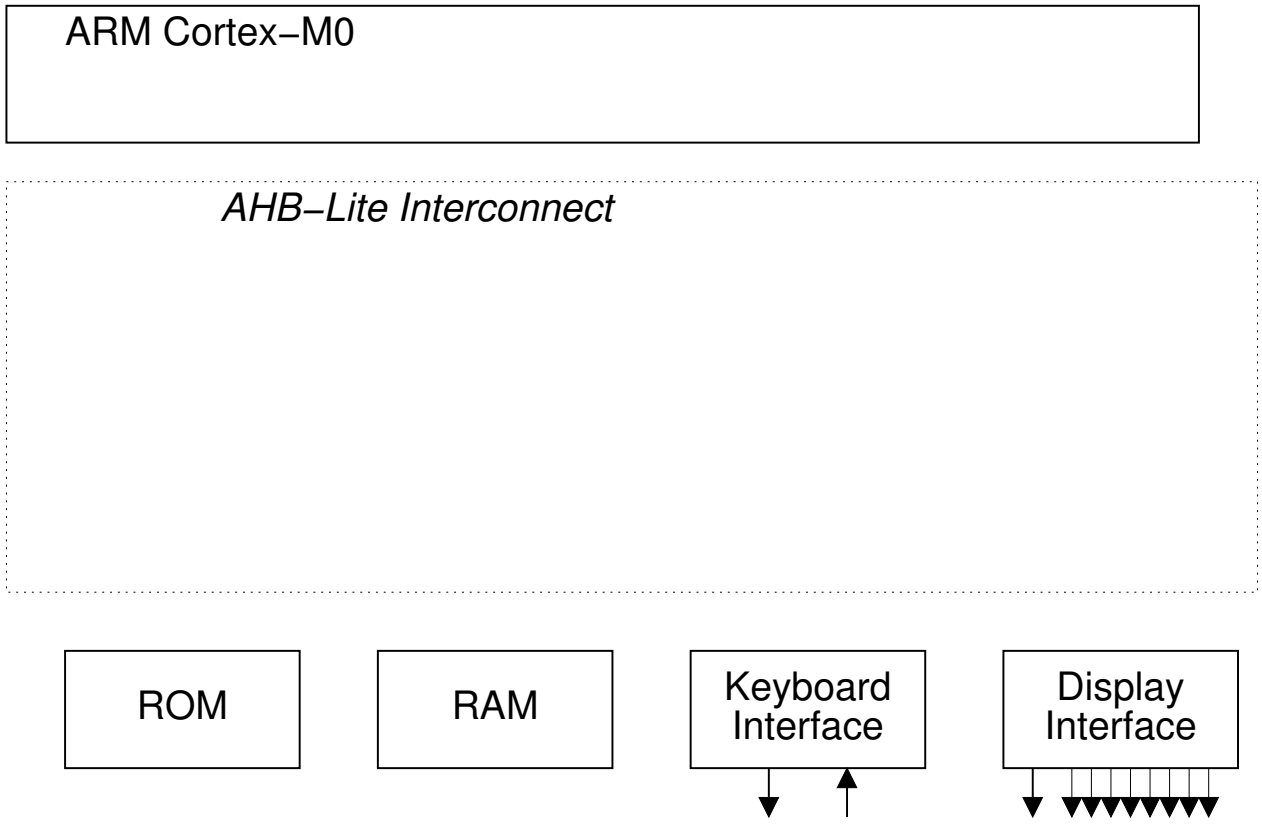

System on Chip

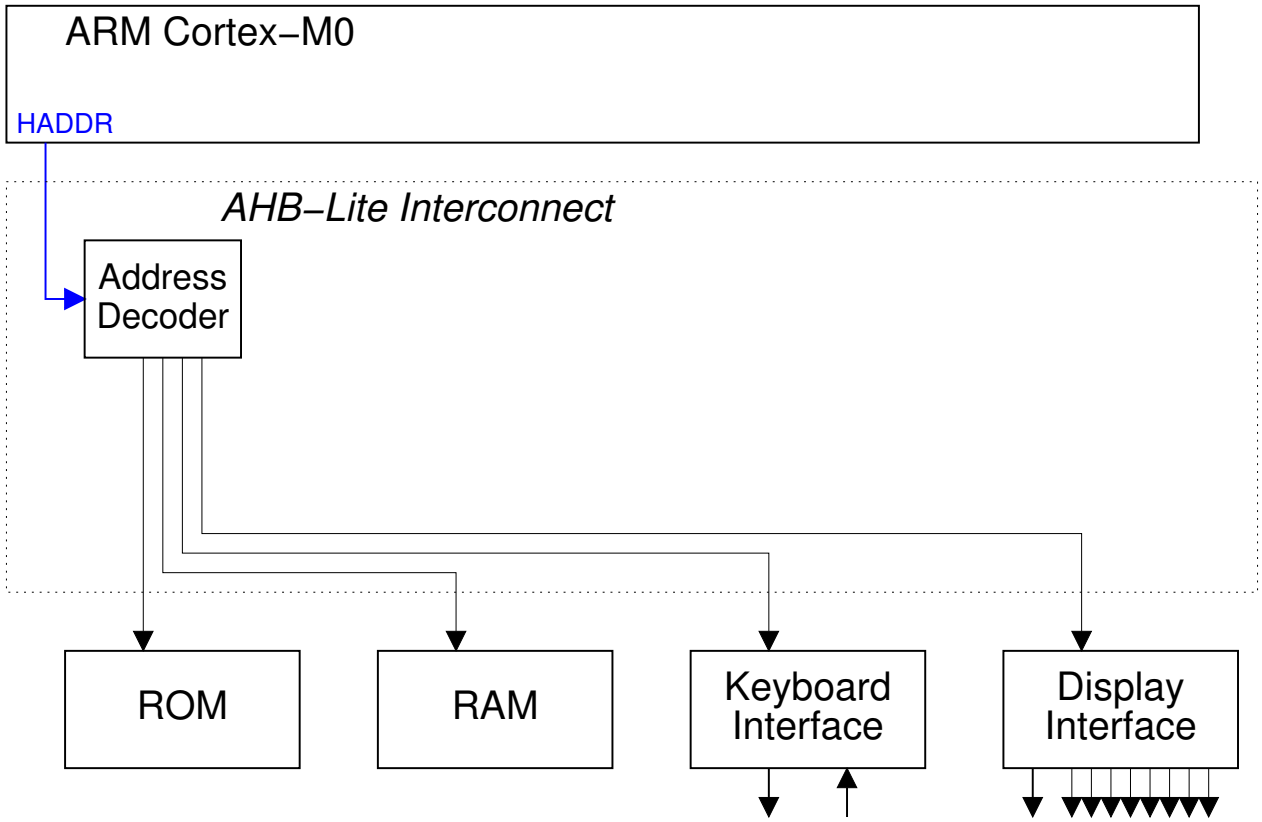

- Individual slave select signals are generated from the high order bits of HADDR

System on Chip

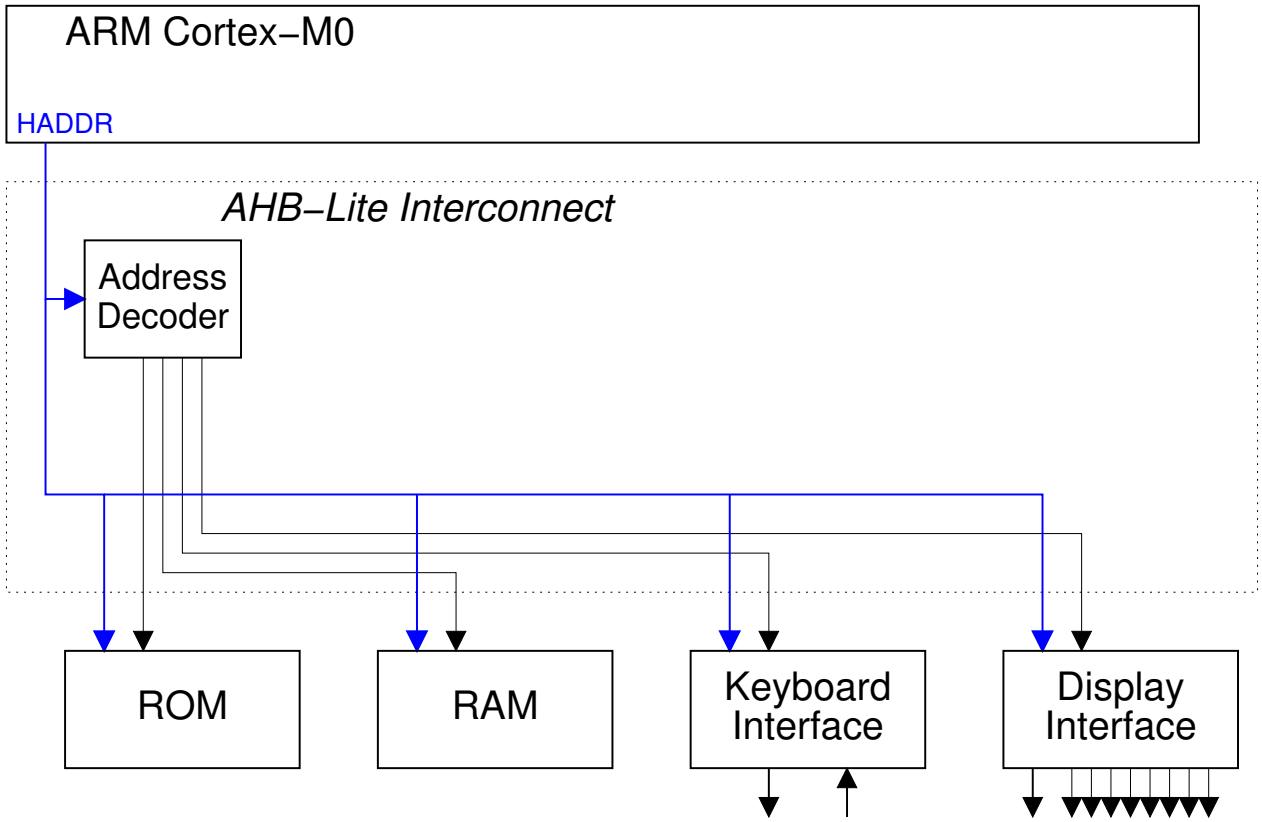

- The low order bits of HADDR are used to select registers within the slaves

System on Chip

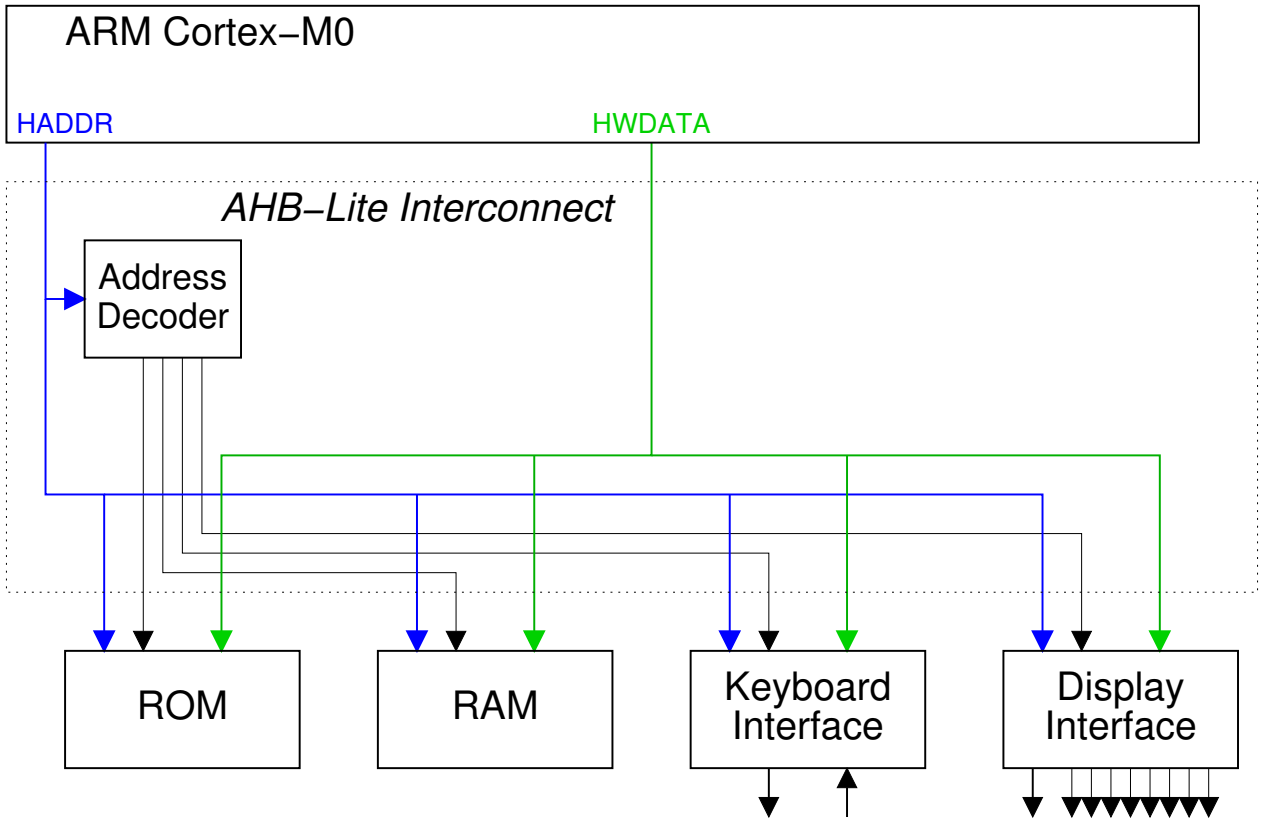

- The write data (HWDATA) is broadcast to all of the slaves

System on Chip

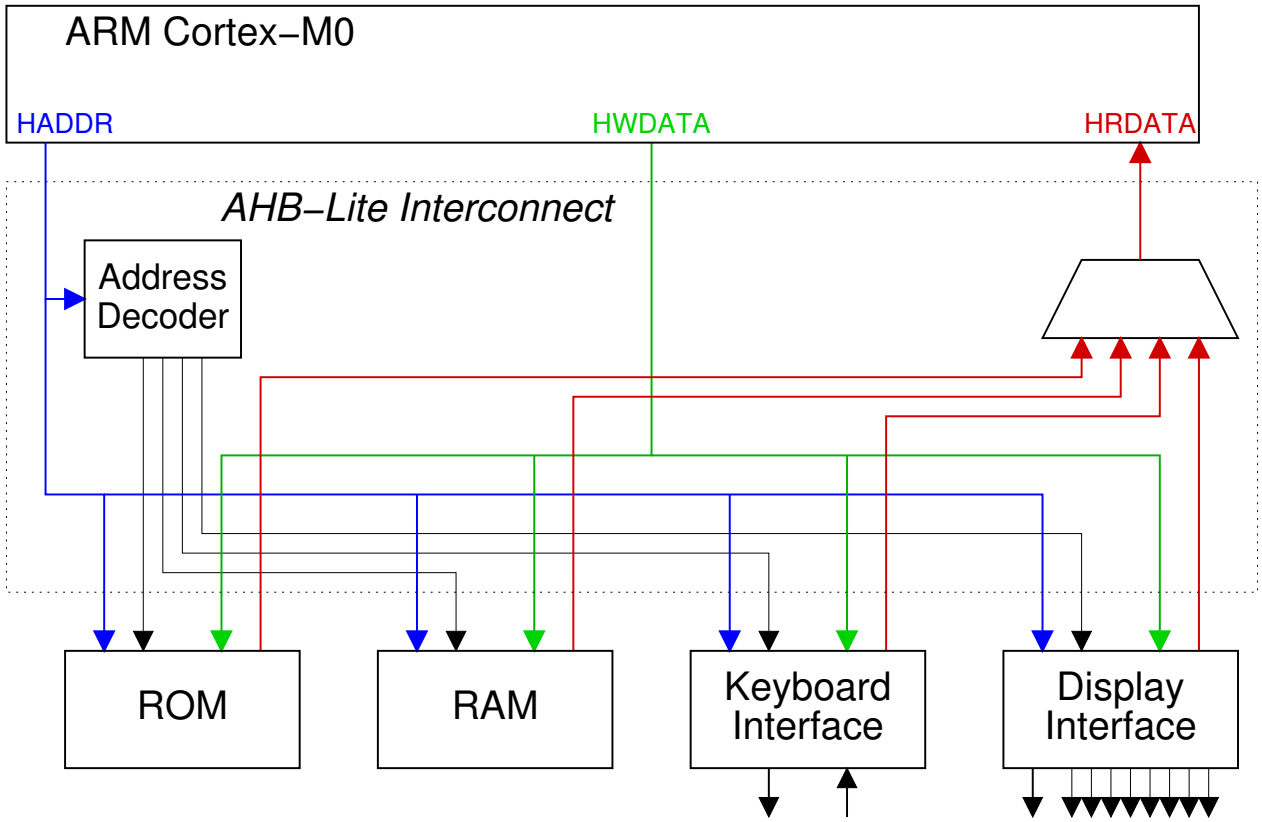

- A multiplexer selects the read data (HRDATA) from one of the slaves

System on Chip

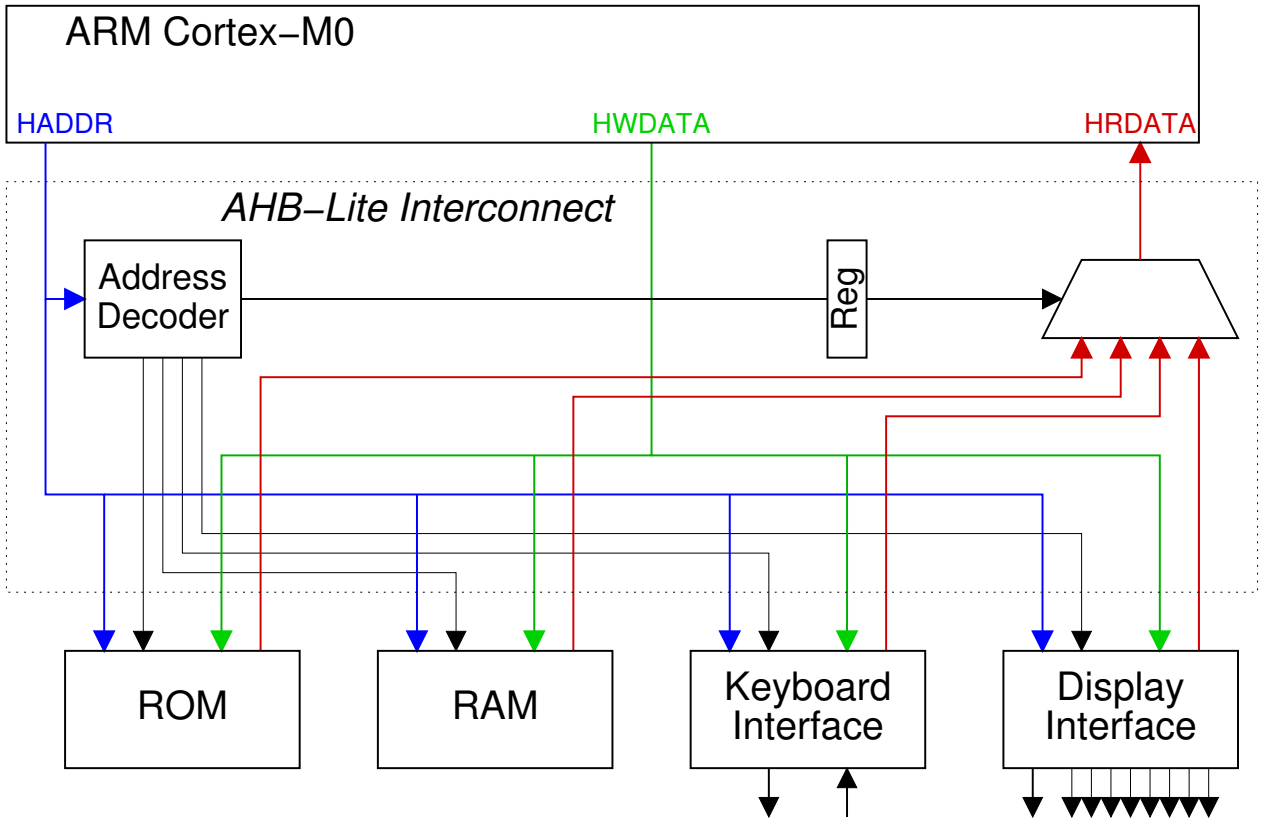

- The Address Decoder controls the multiplexer via a register which adds a single cycle delay

System on Chip

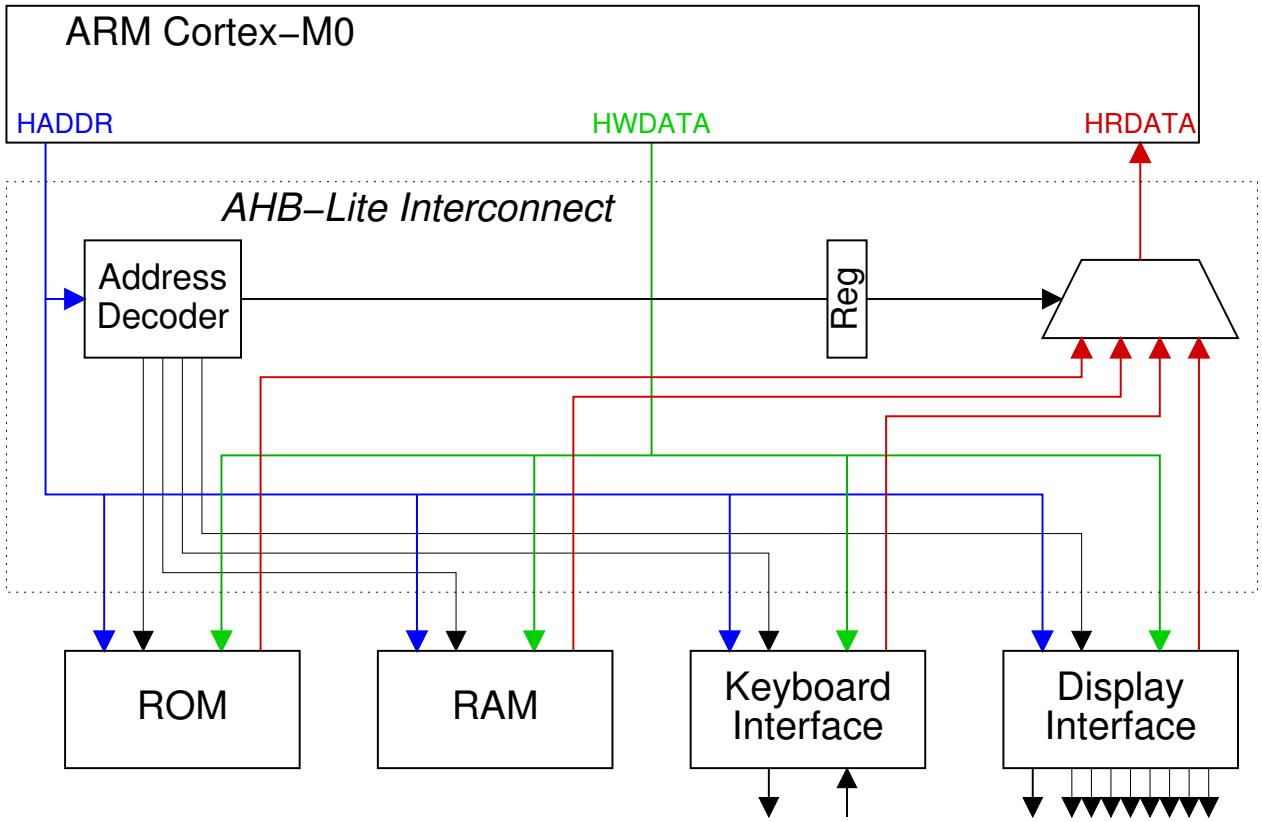

AHB-Lite Interconnect

showing HADDR, HWDATA, HRDATA and individual slave HSEL select signals.

System on Chip

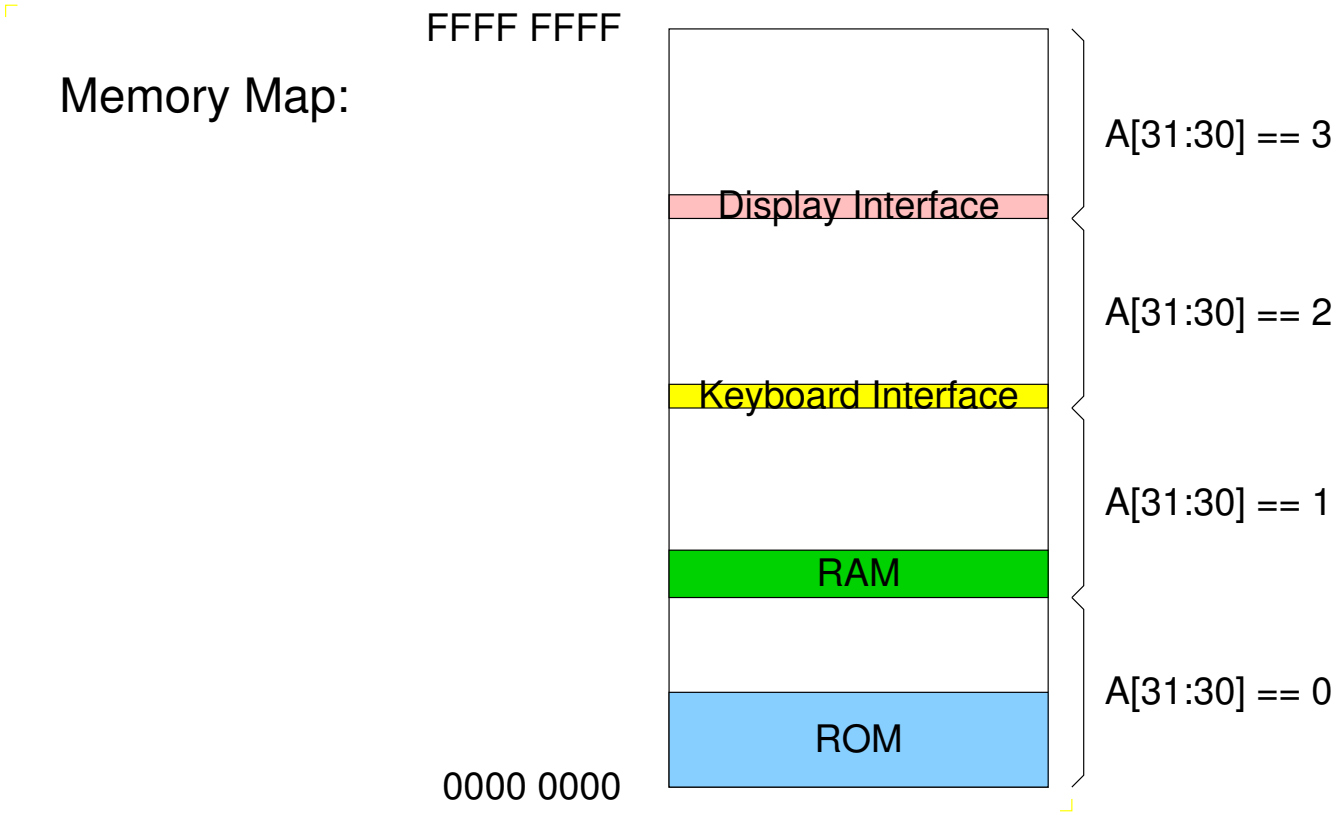

- With partial address decoding we use fewer address lines (A31 and A30 in the example above) and less logic for decoding.
- A side effect of this is that we get multiple images of some or all of the slave devices.

System on Chip

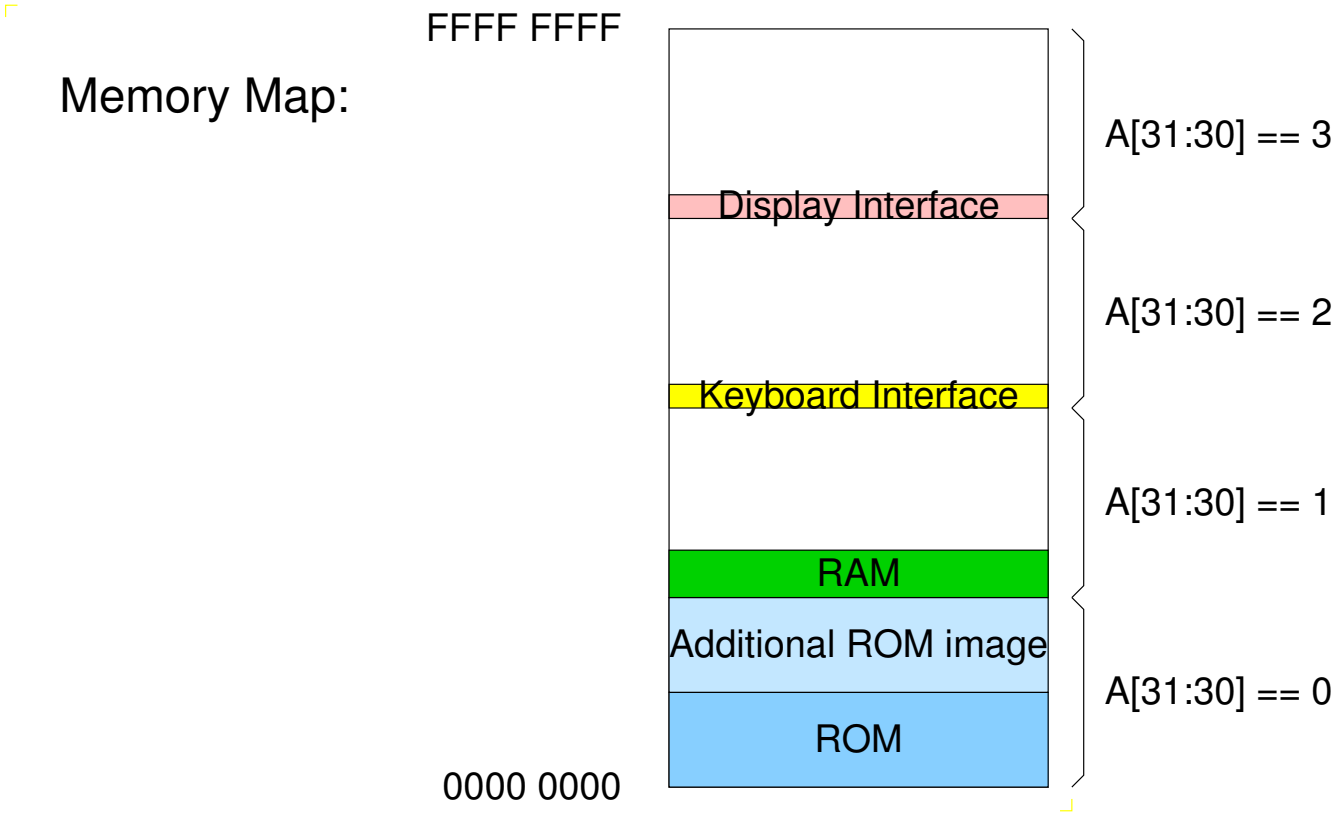

- With partial address decoding we use fewer address lines (A31 and A30 in the example above) and less logic for decoding.
- A side effect of this is that we get multiple images of some or all of the slave devices.

System on Chip

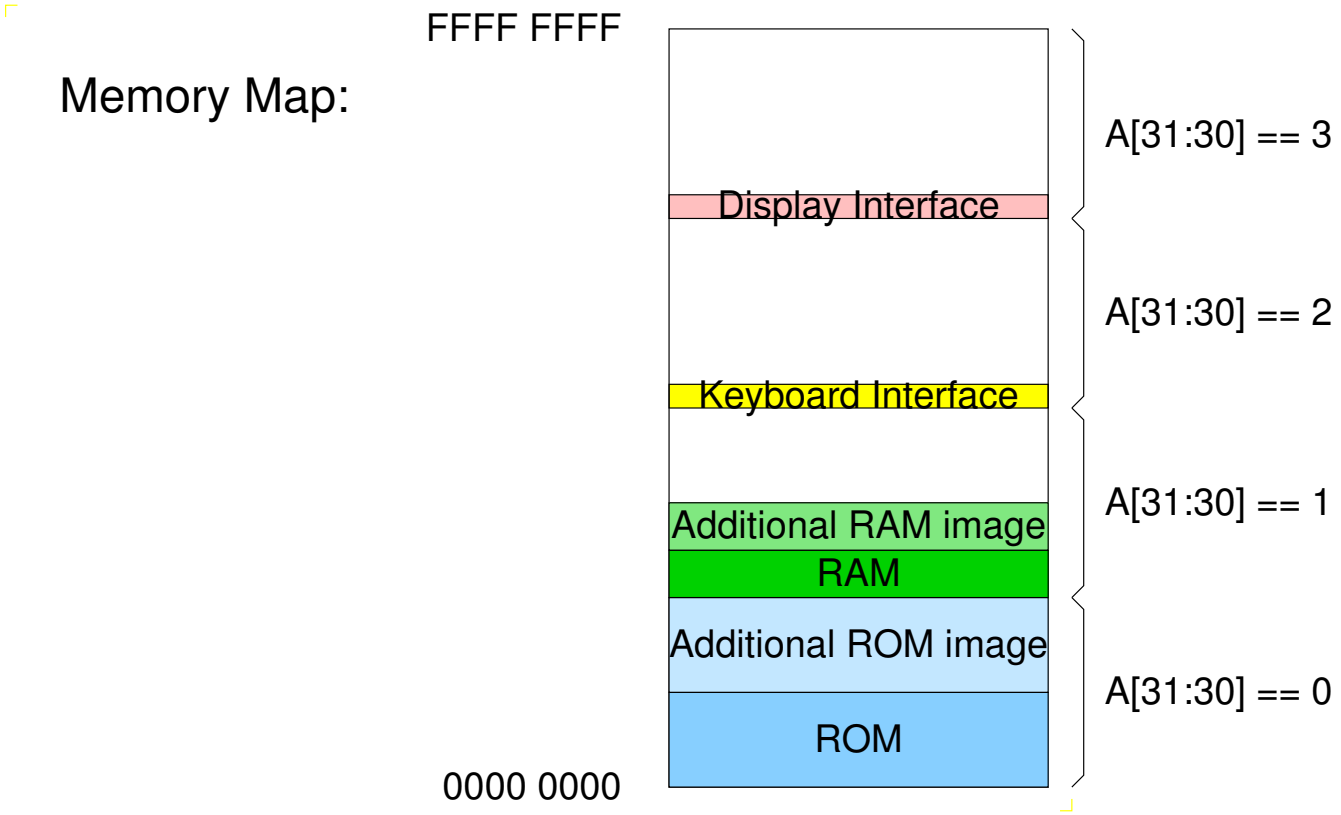

- With partial address decoding we use fewer address lines (A31 and A30 in the example above) and less logic for decoding.
- A side effect of this is that we get multiple images of some or all of the slave devices.

System on Chip

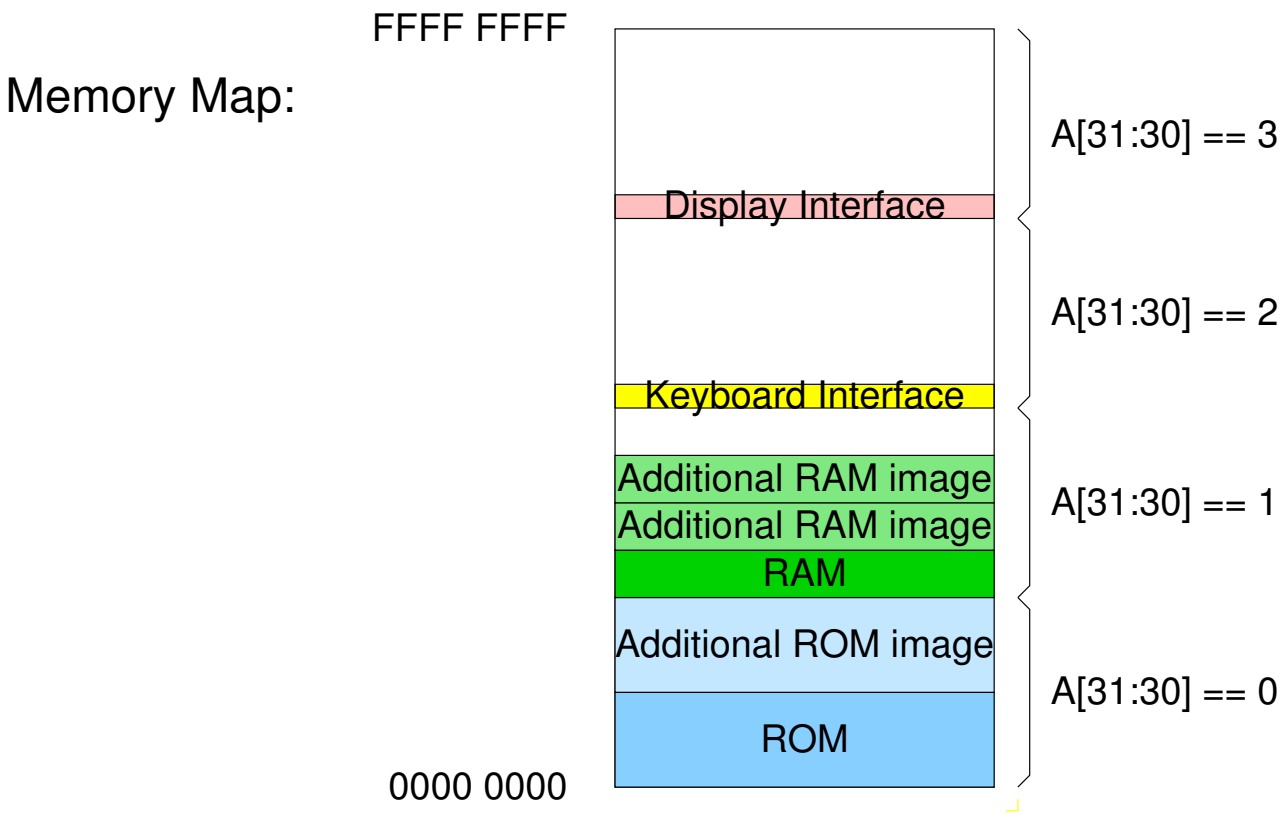

- With partial address decoding we use fewer address lines (A31 and A30 in the example above) and less logic for decoding.
- A side effect of this is that we get multiple images of some or all of the slave devices.

System on Chip

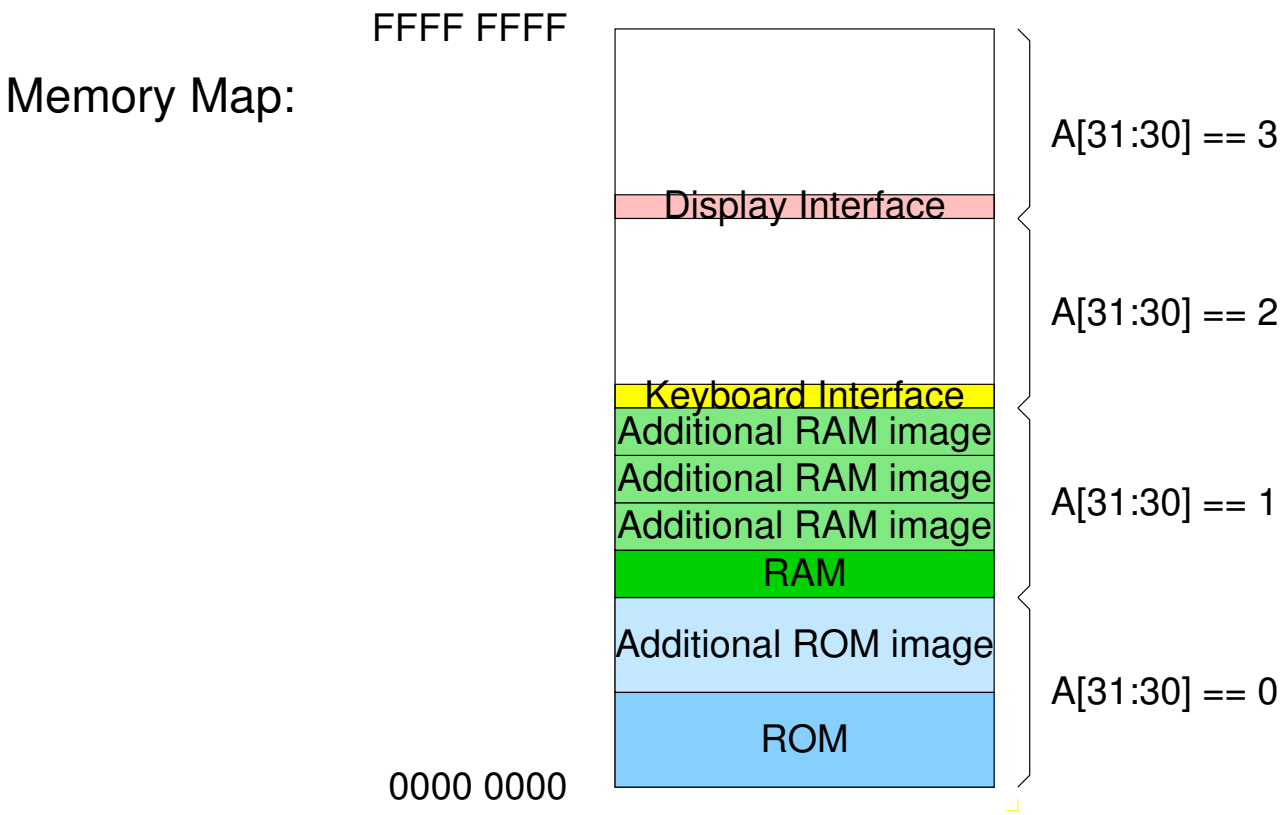

- With partial address decoding we use fewer address lines (A31 and A30 in the example above) and less logic for decoding.
- A side effect of this is that we get multiple images of some or all of the slave devices.

System on Chip

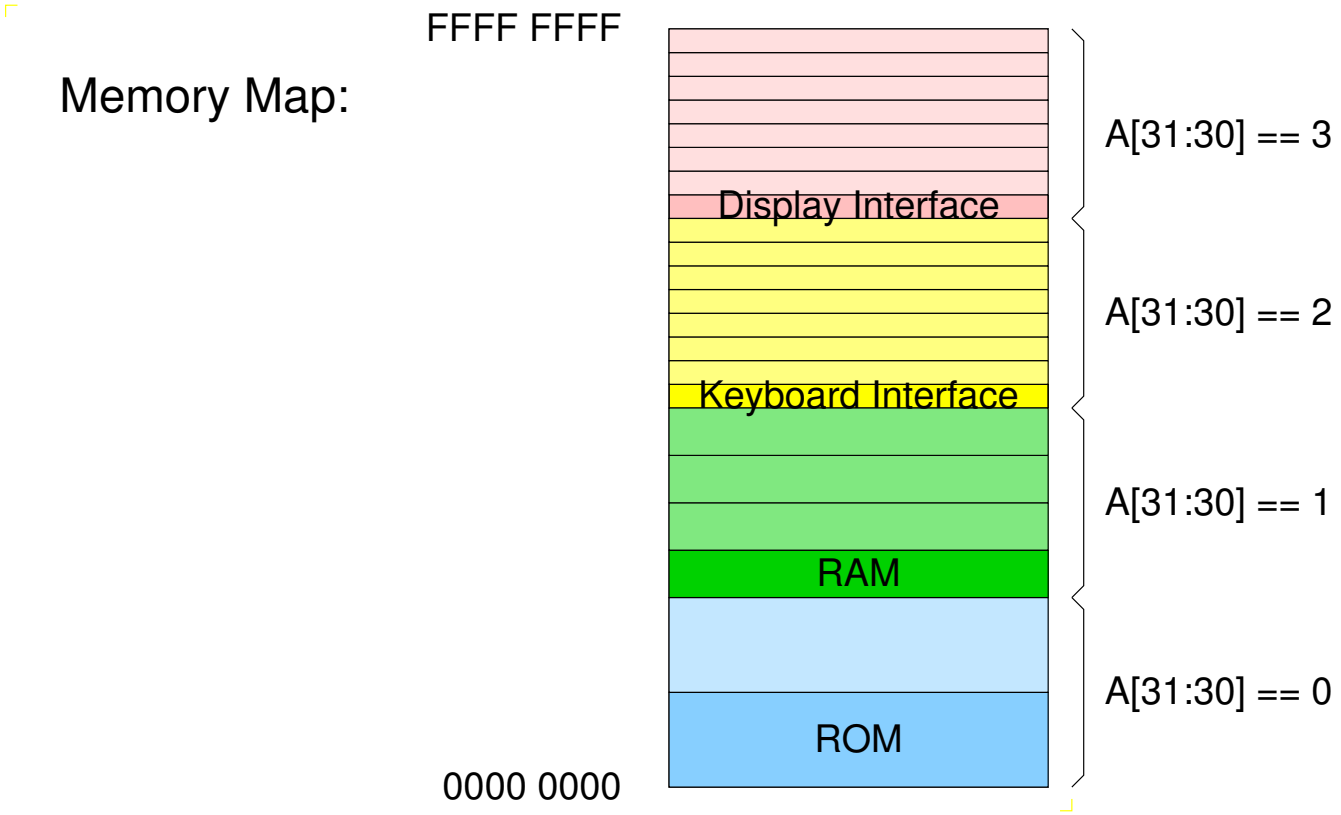

- With partial address decoding we use fewer address lines (A31 and A30 in the example above) and less logic for decoding.
- A side effect of this is that we get multiple images of some or all of the slave devices.

Application Specific Interface Module Design

- Decide on Module Function
  - Some functions are easy in hardware others are easy in software
    While non-specific input and output ports can be used (in the style of a microcontroller i/o ports), this is not usually a good use of system-on-chip resources.
- Decide on the Programmer's Model
  - What Registers?
    Input registers, Output registers, Status registers
  - What Addresses?
  - What side effects?
    e.g. Access to input or output register ⇒ changes status
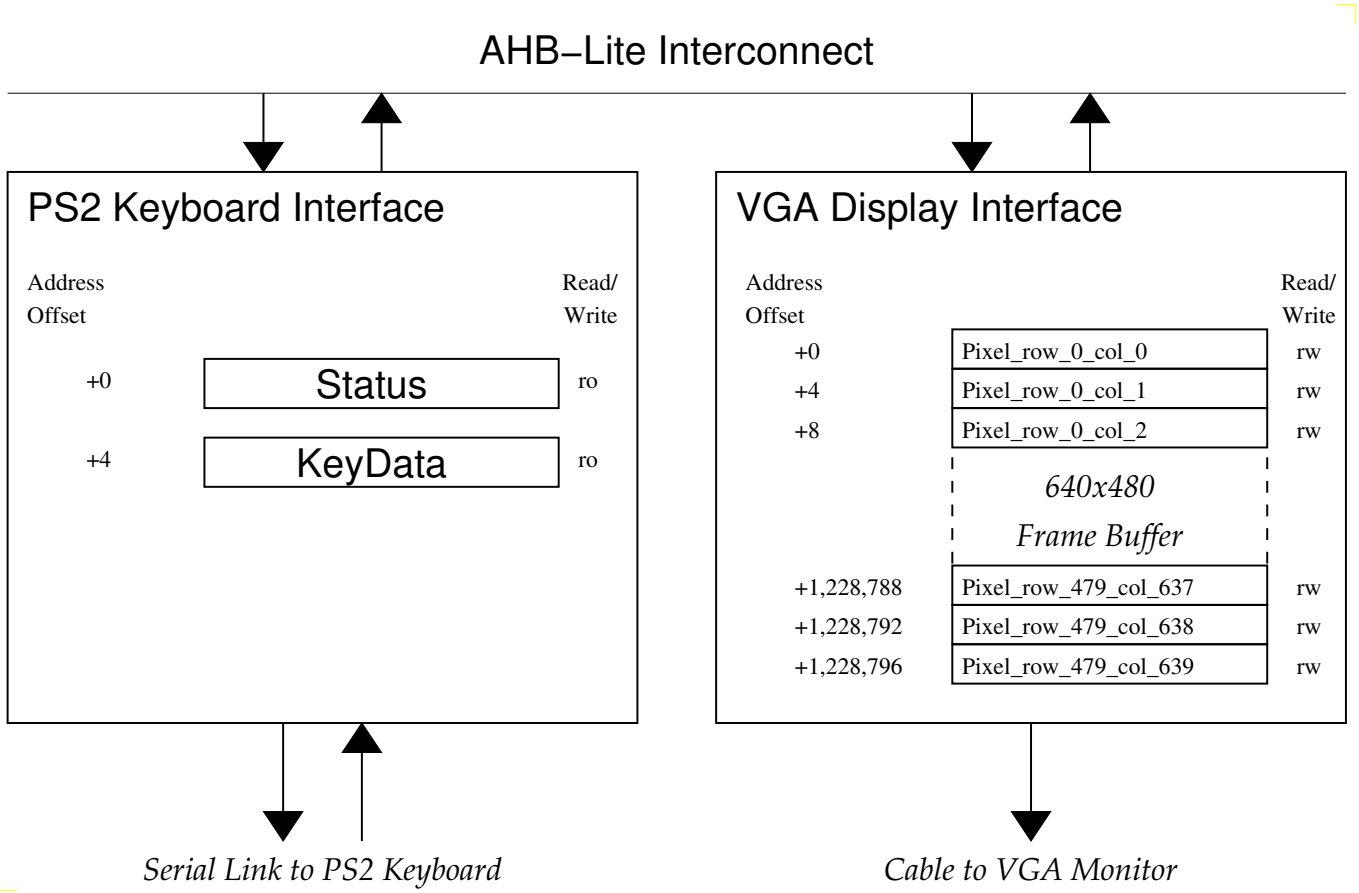
Interface Module Registers