Static CMOS Complementary Gates

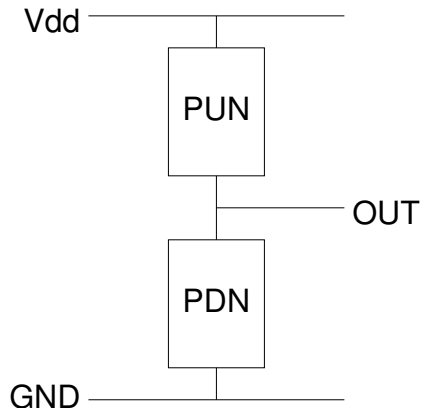

- **Static**

  After the appropriate propagation delay the ouput becomes valid and remains valid.[1]

- **Complementary**

  For any set of inputs there will exist either a path to Vdd or a path to GND.

  Where this condition is not met we have either a high impedence output or a conflict in which the strongest path succeeds. Static CMOS **Non-complementary** gates make use of these possibilities.

[1] c.f. Dynamic logic which uses circuit capicitance to store state for a short time.

Pass Transistor Circuits

- Pass Transistor

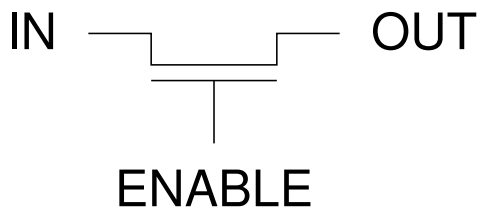

  - Provides very compact circuits.
  - Good transmission of logic '0'.
  - Poor transmission of logic '1'.
    - - slow rise time
    - - degradation of logic value

The pass transistor is used in many dynamic CMOS circuits[2].

[2] where pull-up is performed by an alternative method

Pass Transistor Circuits

- Transmission Gate
  - For static circuits we would normally use a CMOS transmission gates:

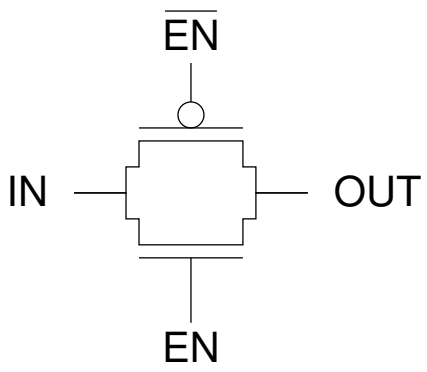

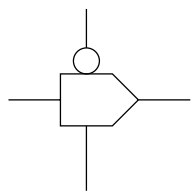

- - balanced *n* and *p* pass transistors
- - faster pull-up
- - slower pull-down

Pass Transistor Circuits

- Transmission Gate Layout

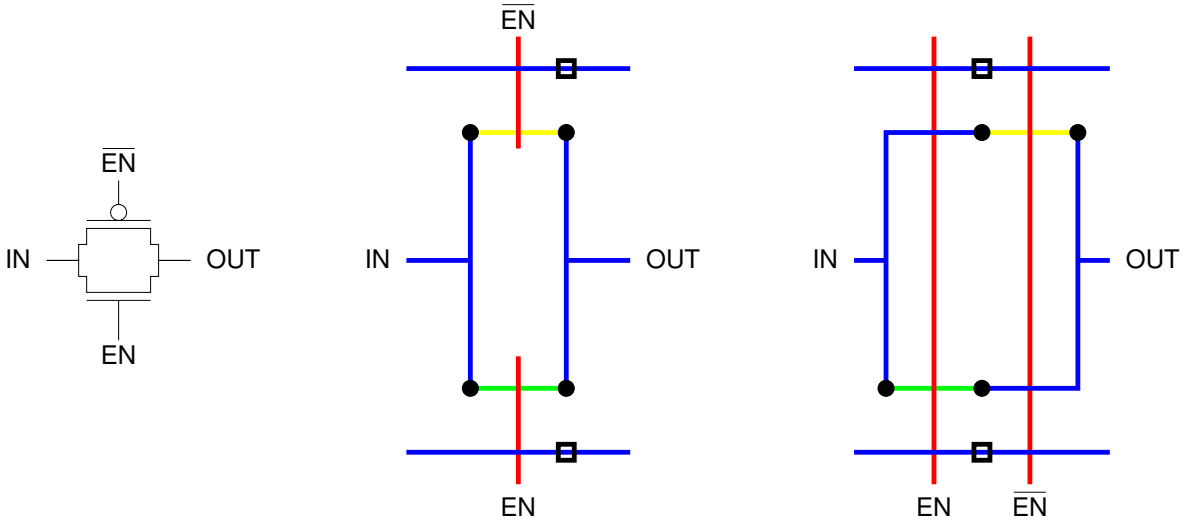

  - note that these circuits are not fully complementary[3] hence they do not immediately lend themselves to a *line of diffusion* implementation.

[3]since there are sets of inputs for which the output is neither pulled low nor high

Pass Transistor Circuits

- Transmission Gate Multiplexor

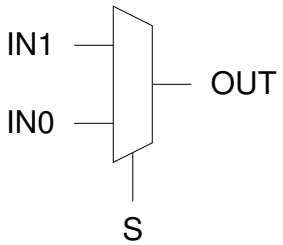

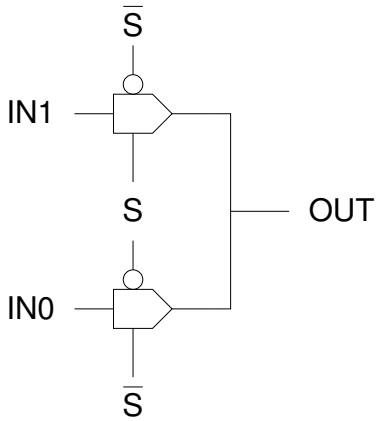

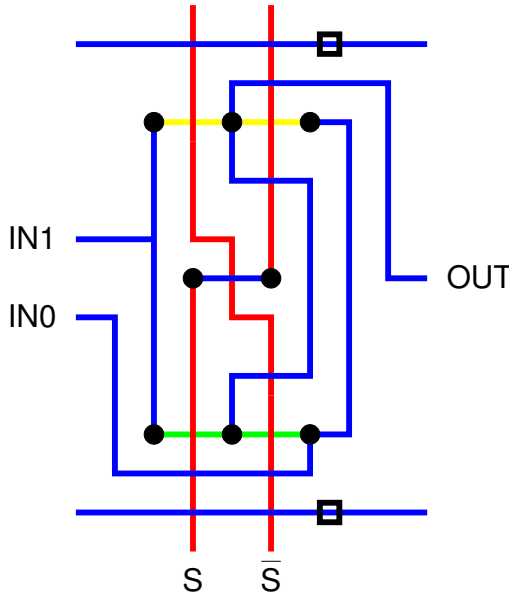

– very few transistors 4 (+2 for inverter)

– difficult layout may offset this advantage

- - prime candidate for 2 level metal

Pass Transistor Circuits

- Bus Wiring

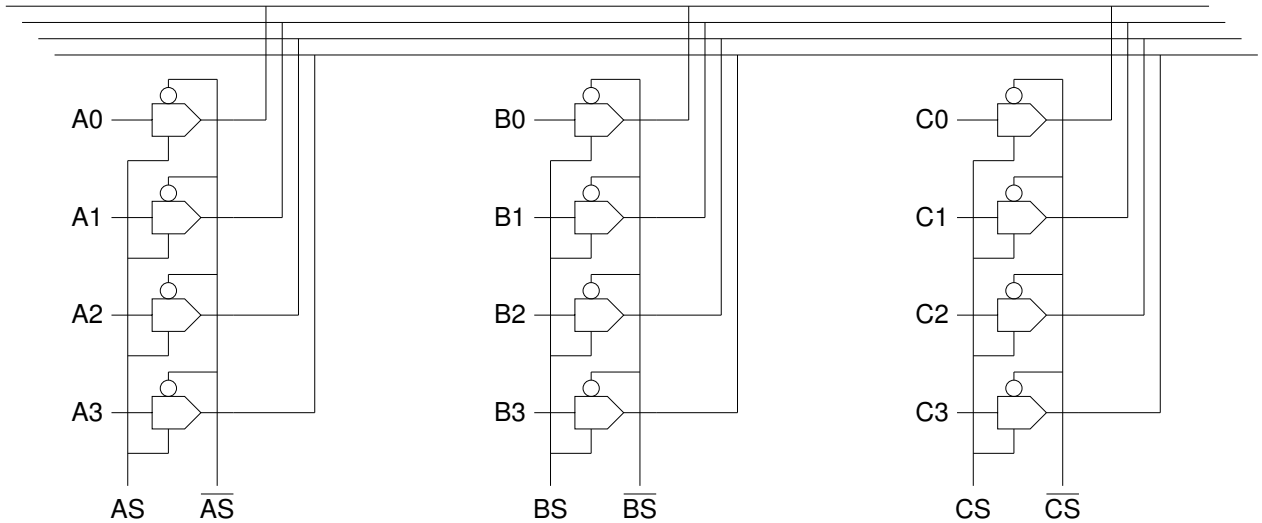

  - distributed multiplexing[4]
  - only one inverter required per bank of transmission gates
  - greatly simplifies global wiring

[4] internal chip bus should never be allowed to float high impedance

Bus Distributed Multiplexing

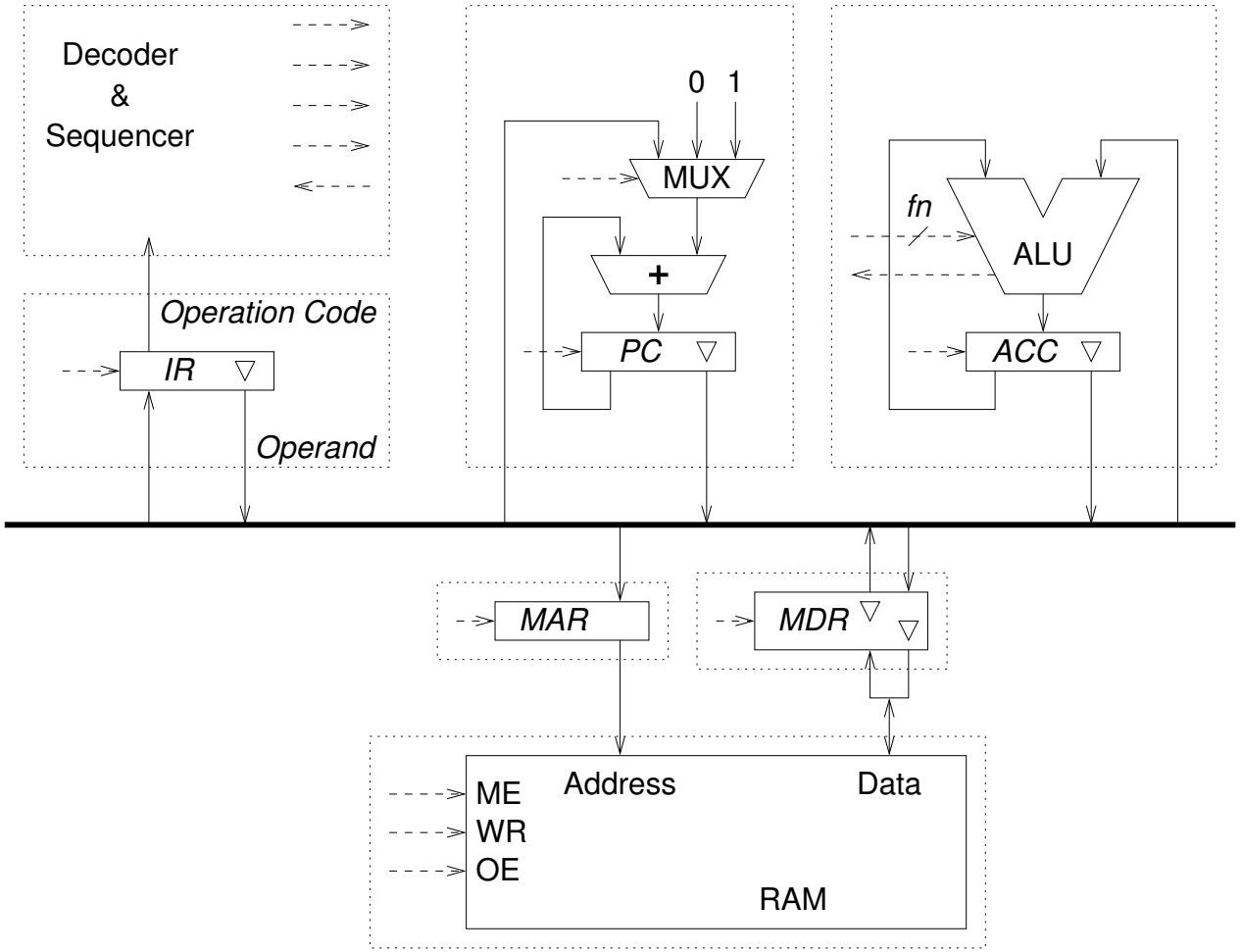

Ideal for signals with many drivers from different modules.

Bus Distributed Multiplexing

Implementation of bitslice ALU:[5]

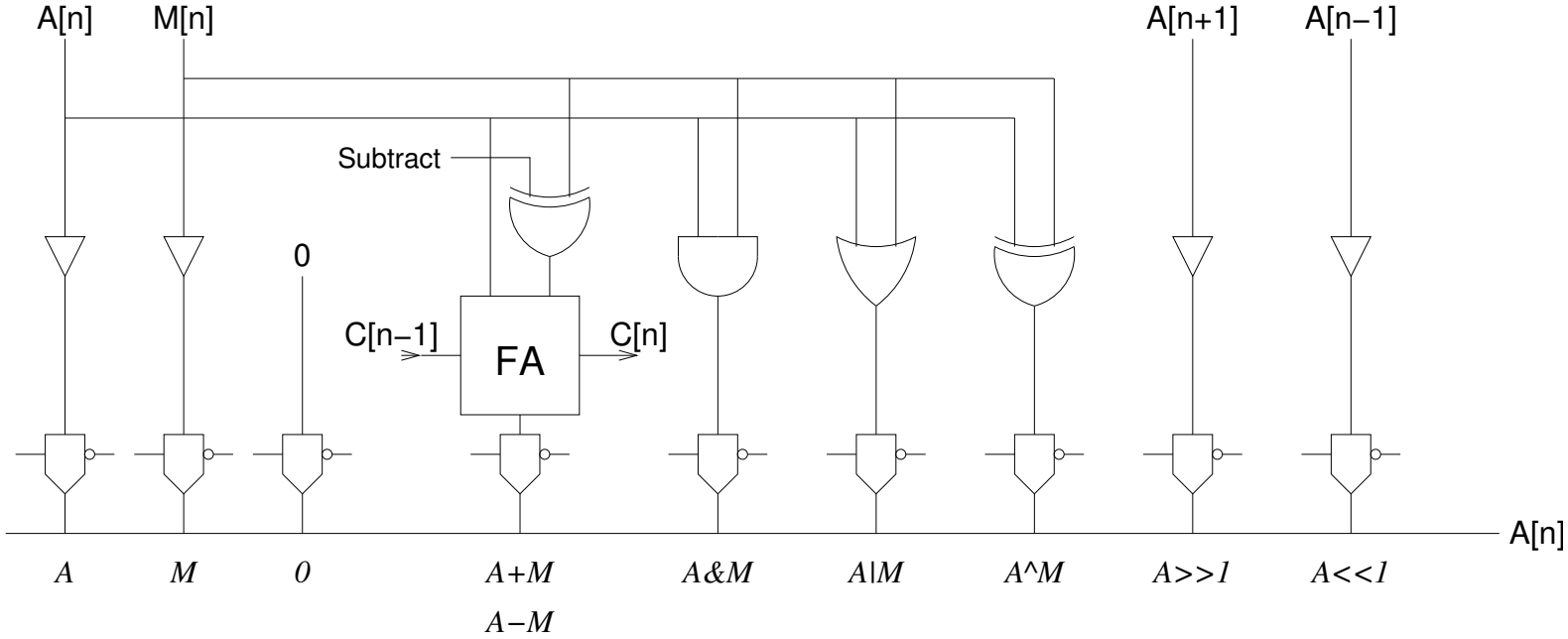

- Separate circuit for each function
- Connected via distributed multiplexor

[5]Note that transmission gates have no drive capability in themselves. Here a good drive is ensured by providing buffers.

Bus Distributed Multiplexing

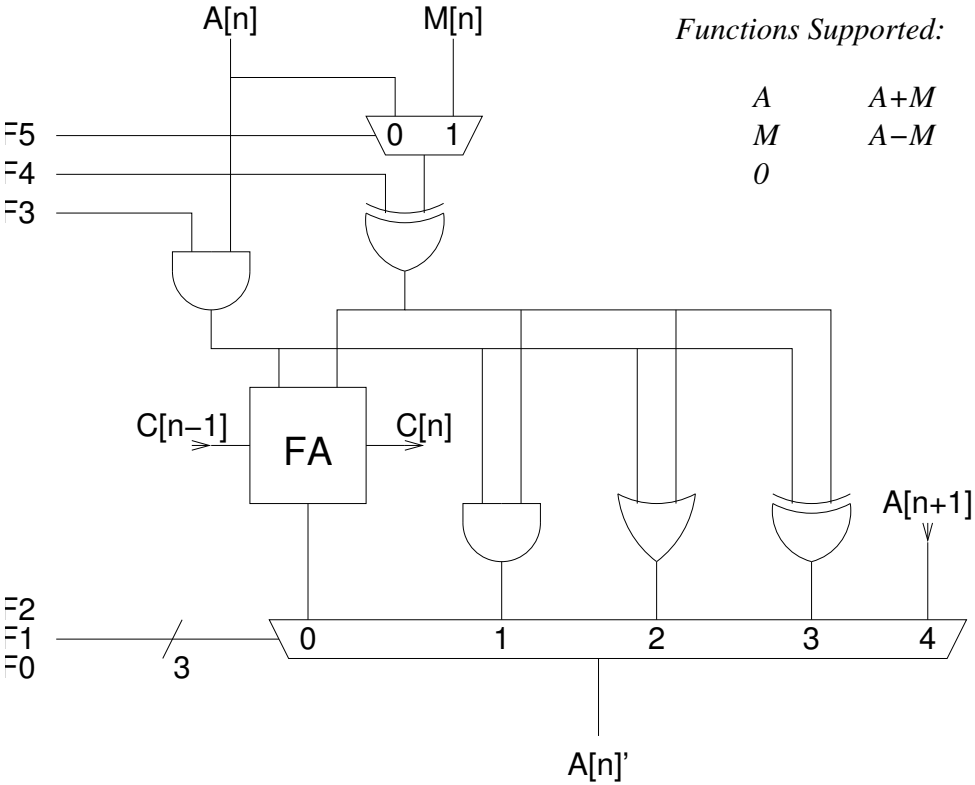

Functions Supported:

A	*A+M*	*A>>1*	*~A*
M	*A−M*	*A<<1*	*~M*
0			*A&M*
			A|M
			A^M
			~(A^M
			A&~M
			A|~M

- Single optimized ALU module
- Multiplexing is not distributed
- Multiplexor implementation may use transmission gates

Pass Transistor Circuits

- Tristate Inverter

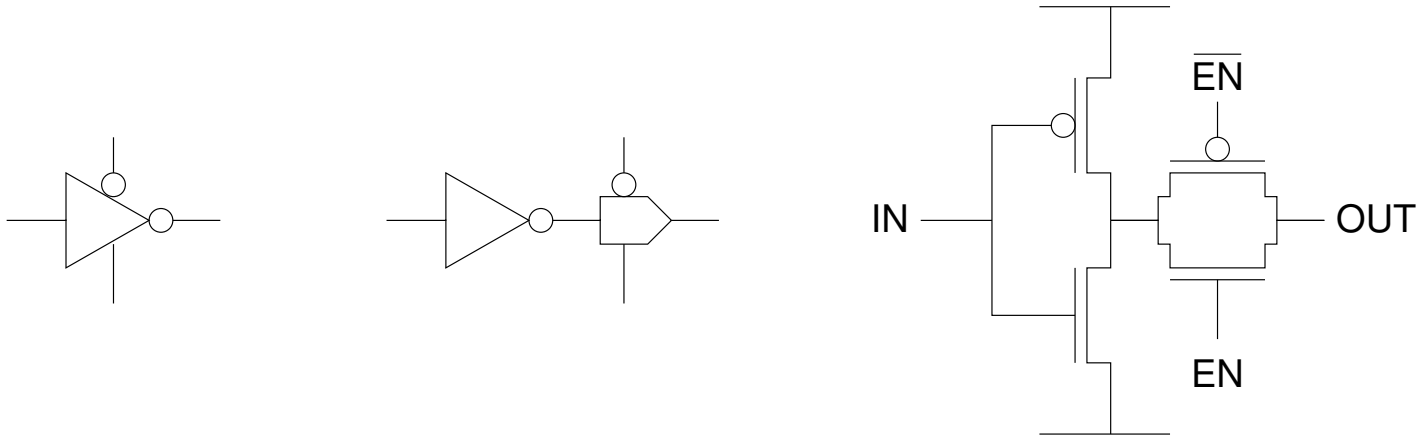

  – Any gate may have a tri-state output by combining it with a transmission gate.

Pass Transistor Circuits

- Tristate Inverter

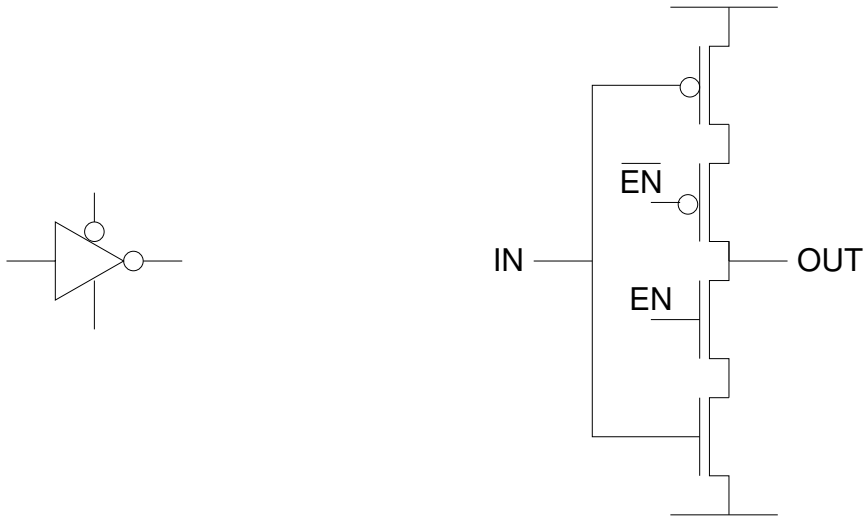

  – Alternatively the transmission gate may be incorporated into the gate.
    - - one connection is removed - easier to layout
    - - also easier to simulate!

Pass Transistor Circuits

- Tristate Inverter Layout

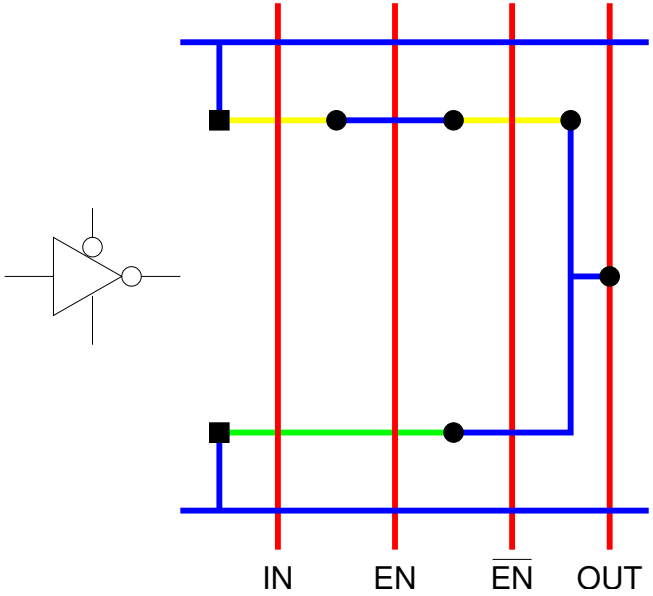

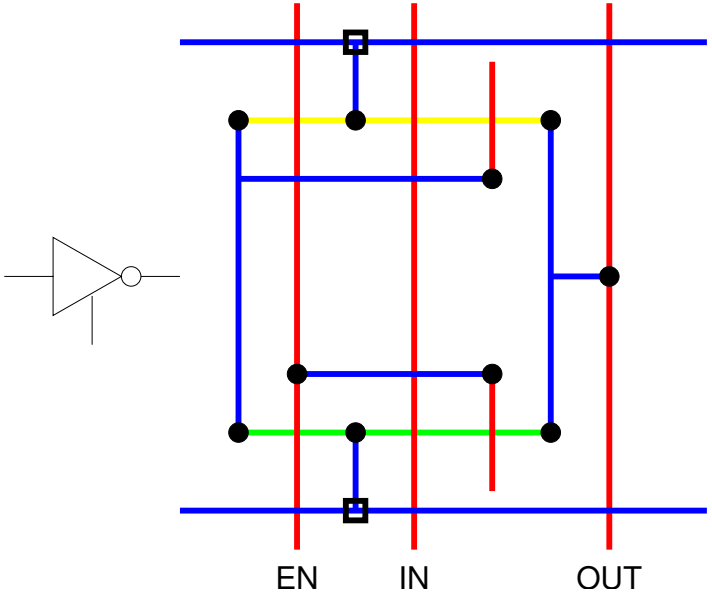

Pass Transistor Circuits

- Tristate Inverter Bus Driver

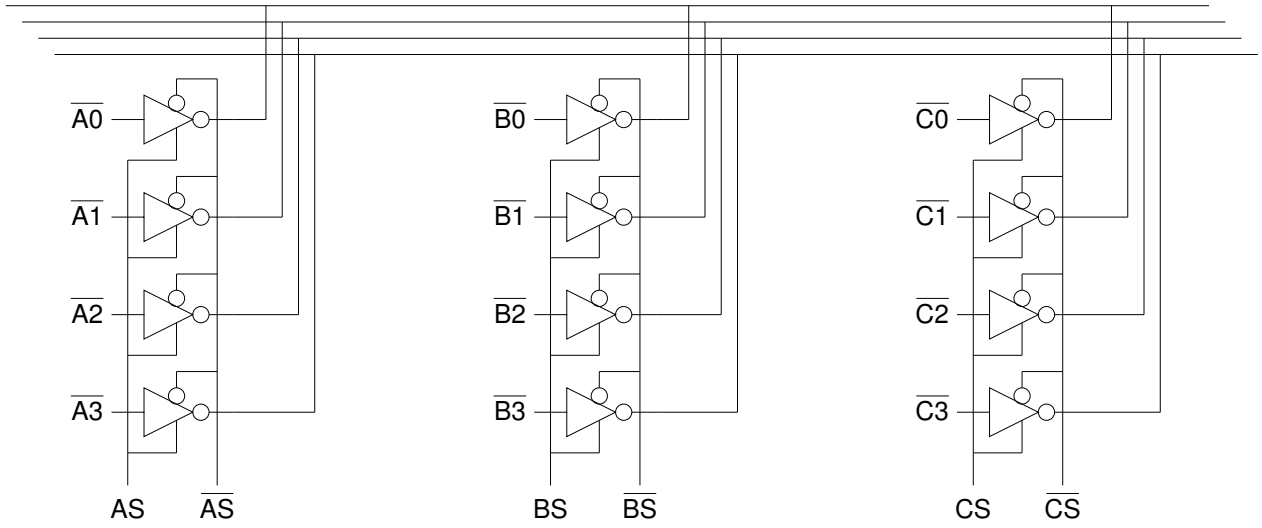

  - a tristate inverting buffer is often used to drive high capacitance bus signals
  - transistors may be sized as required

Pass Transistor

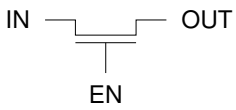

CMOS Transmission Gate

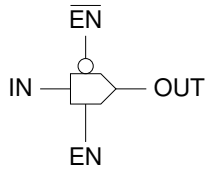

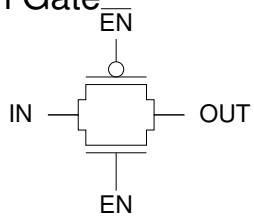

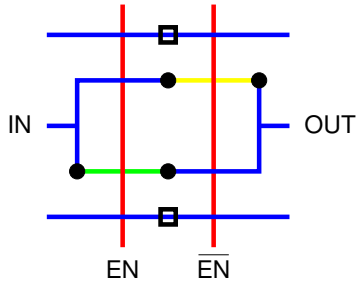

Tri–state gates are used for Multiplexing

Transmission Gate Multiplexor

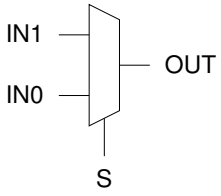

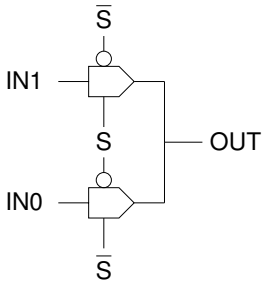

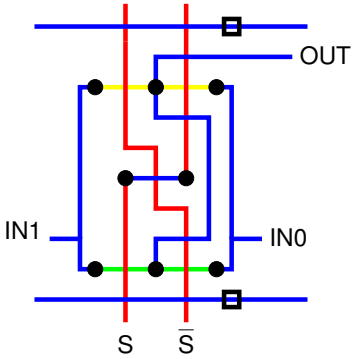

*note distictive polysilicon crossover

Tri–state Inverter

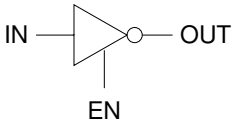

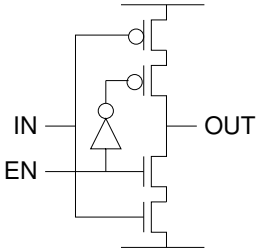

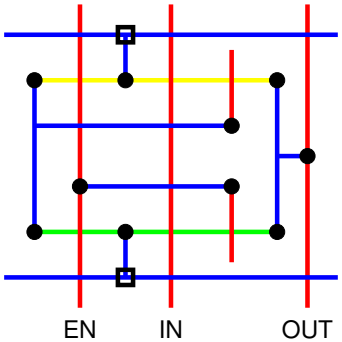

Tri–state Buffer

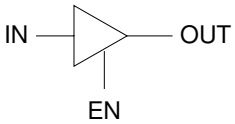

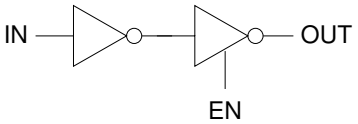

Distributed Multiplexing

using transmission gates

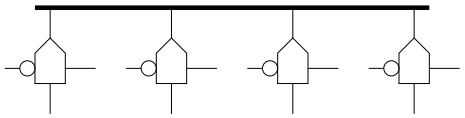

using tri–state inverters

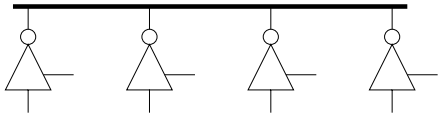

using tri–state buffers

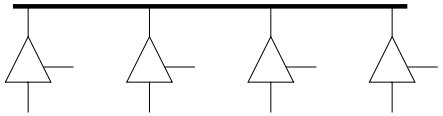

Bi–directional I/O

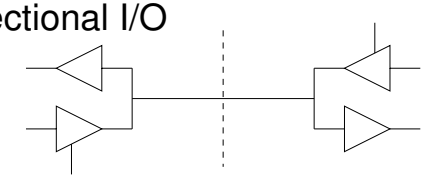

*this is another form of multiplexing